US Department of Transportation
Federal Aviation Administration

MAJOR REPAIR AND ALTERATION
(Airframe, Powerplant, Propeller, or Appliance)

Form Approved OMB No. 2120-0020 2/28/2011

Electronic Tracking Number

For FAA Use Only

INSTRUCTIONS: Print or type all entries. See Title 14 CFR §43.9, Part 43 Appendix B, and AC 43.9-1 (or subsequent revision thereof) for instructions and disposition of this form. This report is required by law (49 U.S.C. §44701). Failure to report can result in a civil penalty for each such violation. (49 U.S.C. §46301(a))

1. Aircraft	Nationality and Registration Mark: USA N40ME	Serial No.: 1241	
	Make: Cessna	Model: 421C	Series:
2. Owner	Name (As shown on registration certificate): Toby E. Marcovich	Address (As shown on registration certificate): Address: 8 THE GRN STE 4661	
		City: Dover	State: DE
		Zip: 19901-3618	Country: USA

3. For FAA Use Only

THE ABOVE DESCRIBED REPAIR COMPLIES WITH APPLICABLE AIRWORTHINESS REQUIREMENTS AND IS APPROVED ONLY FOR THE ABOVE DESCRIBED AIRCRAFT SUBJECT TO CONFORMITY INSPECTION BY A PERSON AUTHORIZED IN FAR 43.7

DATE FAA INSPECTOR

4. Type		5. Unit Identification			
Repair	Alteration	Unit	Make	Model	Serial No.
☐	☑	AIRFRAME	—	(As described in Item 1 above)	—
☐	☐	POWERPLANT			
☐	☐	PROPELLER			
☐	☐	APPLIANCE	Type: / Manufacturer		

6. Conformity Statement

A. Agency's Name and Address
Name: Alan Ray White
Address: 4530 E. Pleasant View Rd
City: Superior State: WI
Zip: 54880 Country: USA

B. Kind of Agency
- ✓ U. S. Certificated Mechanic
- ☐ Foreign Certificated Mechanic
- ☐ Certificated Repair Station
- ☐ Certificated Maintenance Organization
- ☐ Manufacturer

C. Certificate No.
A&P2188785

D. I certify that the repair and/or alteration made to the unit(s) identified in item 5 above and described on the reverse or attachments hereto have been made in accordance with the requirements of Part 43 of the U.S. Federal Aviation Regulations and that the information furnished herein is true and correct to the best of my knowledge.

Extended range fuel per 14 CFR Part 43 App. B ☐

Signature/Date of Authorized Individual
Alan Ray White 05/19/2020
Alan Ray White

7. Approval for Return to Service

Pursuant to the authority given persons specified below, the unit identified in item 5 was inspected in the manner prescribed by the Administrator of the Federal Aviation Administration and is ☒ Approved ☐ Rejected

BY								
		FAA Flt. Standards Inspector		Manufacturer		Maintenance Organization		Persons Approved by Canadian Department of Transport
		FAA Designee		Repair Station	X	Inspection Authorization		Other (Specify)

Certificate or Designation No.
A+P2188785

Signature/Date of Authorized Individual
Alan Ray White 5/28/2020

FAA Form 337 (10-08)

NOTICE

Weight and balance or operating limitation changes shall be entered in the appropriate aircraft record. An alteration must be compatible with all previous alterations to assure continued conformity with the applicable airworthiness requirements.

8. Description of Work Accomplished
(If more space is required, attach additional sheets. Identify with aircraft nationality and registration mark and date work completed.)

USA N40ME	05/19/2020
Nationality and Registration Mark	Date

Replace existing rear white position light with uAvionix tailBeacon assembly P/NUAV-1002183-001 MOD: 1 S/N 2013448 in accordance with tailBeacon STC Installation Guide, Document # UAV-1002514-001. Used the existing position light circuit and confirmed appropriate per AC43.13-B Chapter 11, Sections 5&6.

Existing position light wiring was terminated to the tailBeacon position light wire (red wire), and tailBeacon ground (black wire) using splice P/N UAV-1001487-001 crimp connectors provided.

Configuration of the tailBeacon was performed with the following data:
Anonymous mode off
Call sign N40ME
ICAO Number: ~~5114564D~~ A4AB60
Vso: 74 knots
ADS-B In Capability ~~None~~ 978
Position Light: On
Emitter Type: Light Aircraft
Aircraft Lenghth: ~~11 M~~ 16
Aircraft Width: ~~12.5 M~~ ≤ 23
GPS Antenna Offset (Lateral): 0 M
GPS Antenna Offset (Longitudinal) ~~0~~ 4 M

1. Placard installed next to position light switch
2. tailBeacon Instructions for Continued Airworthiness uAvionix Document # UAV-1002513-001 added to aircraft records.
3. tailbeacon Flight Manual Supplement uAvionix Document # UAV-1002512-001 added to the aircraft approved flight manual.
4. Airworthiness Limitations: No additional Airworthiness Limitations.
5. Weight and Balance change negligible. no new weight and balance required. Equipment list was revised.
6. The equipment was mounted on a fixed airframe surface, no control balance changes.
7. the above modification was found not to interfere with other installed systems and/or modifications, and does not exceed 80% of alternator output capacity. No adverse interference to radios or navigation systems was found while operating the tailBeacon during the configuration process.

The installed ADS-B OUT system was shown to meet the equipment performance requirements of 14 CFR section 91.227

END

☐ Additional Sheets Are Attached

uAvionix Corporation
300 Pine Needle Lane
Bigfork, MT 59911 U.S.A.

September 13, 2019

Subject: STC permission to use FAA STC SA04427CH for installation of uAvionix tailBeacon ADS-B Out Transmitter

Consistent with FAA Order 8110.4C and AC 21-40A, uAvionix Corporation grants permission to uAvionix dealers, installers, and owners of tailBeacon ADS-B Out Transmitter units to utilize FAA Supplemental Type Certificate (STC) SA04427CH and associated data, for the sole and express purpose of installation and approval of the uAvionix tailBeacon ADS-B Out Transmitter. uAvionix grants permissions to use the associated data for obtaining other FAA approved means of installation for aircraft not covered in STC SA04427CH, such as FAA Policy Memorandum, *Installation Approval for ADS-B OUT Systems*, dated March 2, 2016. Following the aircraft modification, a copy of this permission statement should be placed in the aircraft's permanent records.

Ryan C. Braun

Ryan C. Braun
Chief Operating Officer
uAvionix Corporation

United States of America
Department of Transportation — Federal Aviation Administration

Supplemental Type Certificate

Number SA04427CH

This certificate issued to uAvionix Corporation
2411 W. Winnemac Avenue
Chicago, IL 60625

*certifies that the change in the type design for the following product with the limitations and conditions therefor as specified hereon meets the airworthiness requirements of Part * of the * Regulations.*

Original Product - - Type Certificate Number *
Make : *
Model : *

* See attached FAA Approved Model List (AML) No. SA04427CH for list of approved airplane models and applicable airworthiness regulations.

Description of Type Design Change:

Installation of the uAvionix tailBeacon Automatic Dependent Surveillance-Broadcast (ADS-B) Out in accordance with uAvionix tailBeacon Installation Manual UAV-1002514-001, Revision B, dated August 28, 2019 and AML Number SA04427CH or later FAA approved revisions.

Limitations and Conditions :

1) Compatibility of this design change with previously approved modifications must be determined by the installer.
2) A copy of this certificate and FAA Approved Model List (AML) Number SA04427CH issued September 13, 2019, or later FAA approved revision, must be maintained as part of the permanent records for the modified aircraft.
3) FAA Approved Airplane Flight Manual Supplement as listed on FAA AML No. SA04427CH, or later FAA approved revision, is required on board the modified aircraft.
4) If the holder agrees to permit another person to use this certificate to alter the product, the holder shall give the other person written evidence of that permission.

This certificate and the supporting data which is the basis for approval shall remain in effect until surrendered, suspended, revoked or a termination date is otherwise established by the Administrator of the Federal Aviation Administration.

Date of application : May 7, 2019

Date of issuance : September 13, 2019

Date reissued :

Date amended :

By direction of the Administrator

Thomas Clark
(Signature)

for Steven L. Lardinois
Manager, Systems Section
Chicago ACO Branch

(Title)

Any alteration of this certificate is punishable by a fine of not exceeding $1,000, or imprisonment not exceeding 3 years, or both.

This certificate may be transferred in accordance with FAR 21.47.

Appendix A – Installation Record

A copy of this appendix must be used to record installation information and must be kept in the aircraft permanent records.

NOTE: A copy of this form must be sent to maintenance@uavionix.com.

---

tailBeacon Installation and Configuration Log

Date: 5/28/2020	By: Alan R. White
Aircraft Information	
Make: Cessna	Model: 421C
Serial Number: 1241	Registration Number: N40ME
tailBeacon Information	
Serial Number: 2013448	Wi-Fi SSID: Beacon-7624
tailBeacon Configuration	
Transmit Enabled: ☒ On ☐ Off	Anonymous Mode: ☐ On ☒ Off
Call Sign: N40ME	ICAO Number (hex): A4A860
V_{SO} (knots): 74	ADS-B In Capability: ☒ 978 ☐ 1090
Position Light: ☒ On ☐ Off	
Emitter Type: Light Aircraft	Transponder Mon. Threshold: 35%
Aircraft Length: ≤ 15	Aircraft Width: ≤ 23
GPS Antenna Offset (Lat): 0	GPS Antenna Offset (Lon): +4
Customer Information	
Name: Toby E. Marcovich	
Email: Sherriewenske@superiorlawyers.org	
Telephone: 715 394-6624	
Address: 8 THE GRN STE 4641 Dover DE 19901-3618	

FAA Copy

U.S Department of Transportation
Federal Aviation Administration

MAJOR REPAIR AND ALTERATION
(Airframe, Powerplant, Propeller, or Appliance)

Form Approved
OMB No. 2120-0020

For FAA Use Only

Office Identification

INSTRUCTIONS: Print or type all entries. See FAR 43.9, FAR 43 Appendix B, and AC 43.9-1 (or subsequent revision thereof) for instructions and disposition of this form. This report is required by law (49 U.S.C. 1421). Failure to report can result in a civil penalty not to exceed $1,000 for each such violation (Section 901 Federal Aviation Act 1958)

1. Aircraft	Make: Cessna	Model: 421C
	Serial No.: 421C1241	Nationality and Registration Mark: USA N40ME
2. Owner	Name *(As shown on registration certificate)*: TOBY E MARCOVICH S C	Address *(As shown on registration certificate)*: 26 S MAIN ST CONCORD, NH, 03301

3. For FAA Use Only

4. Unit Identification				**5. Type**	
Unit	Make	Model	Serial No.	Repair	Alteration
AIRFRAME	~~~~~~~~~~~~~~~~~~~~~~~~*(As described in item 1 above)*~~~~~~~~~~~~~~~~~~~~~~~~				XX
POWERPLANT					
PROPELLER					
APPLIANCE	Type				
	Manufacturer				

6. Conformity Statement

A. Agency's Name and Address	B. Kind of Agency	C. Certificate No.
R. C. Avionics Inc 8891 Airport Road, P.O. Box B7 Building 2161 Missouri Row Blaine, MN 55449	☐ U.S. Certified Mechanic ☐ Foreign Certified Mechanic ☒ Certified Repair Station ☐ Manufacturer	KP5R996M

D. I certify that the repair and/or alteration made to the unit(s) identified in item 4 above and described on the reverse or attachments hereto have been made in accordance with the requirements of Part 43 of the U.S. Federal Aviation Regulations and that the information furnished herein is true and correct to the best of my knowledge.

Date	Signature of Authorized Individual
04/09/07	Alan Akre

7. Approval for Return to Service

Pursuant to the authority given persons specified below, the unit identified in item 4 was inspected in the manner prescribed by the Administrator of the Federal Aviation Administration and is ☒ APPROVED ☐ REJECTED

BY							
		FAA Flt Standards Inspector		Manufacturer		Inspection Authorization	Other *(Specify)*
		FAA Designee	X	Repair Station		Person Approved by Transport Canada Airworthiness Group	

Date of Approval or Rejection	Certificate or Designation No.	Signature of Authorized Individual
04/09/07	KP5R996M	Alan Akre

FAA Form 337 (12-88)

NOTICE

Weight and balance or operating limitation changes shall be entered in the appropriate aircraft record. An alteration must be compatible with all previous alterations to assure continued conformity with the applicable airworthiness requirements.

8. Description of Work Accomplished

(If more space is required, attach additional sheets. Identify with aircraft nationality and registration mark and date work completed.)

N40ME

RC AVIONICS FAA CRS KP5R996M INSTALLED THE FOLLOWING:

Performed GPS-530 WAAS Upgrade to existing previously IFR Approved GPS-530 as per Garmin STC SA01933LA and Garmin STC Upgrade Installation Manual P/N 190-00357-06 Jan 07 Rev. B.

Aircraft is on the Approved Model List Issued November 6, 2006.

Removed Garmin GA-56 Antenna P/N 011-00134-00 and installed new GA-35 GPS/WAAS Antenna P/N 013-00235-00 S/N14934. Removed Garmin GPS-530 P/N 011-01064-40 S/N 78412692 and installed WAAS upgraded unit P/N 011-01064-40 S/N 78412692. The unit was configured identical to the original 530 unit. Performed all post installation checkouts.

FAA Approved Flight Manual Supplement, P/N 190-00356-63 Rev. B Dated December 21, 2006 installed in Aircraft Flight Manual.

A logbook entry has been made stating this approval.

See attached Instructions for Continued Airworthiness.

----------END----------

☒ Additional Sheets Are Attached

United States Of America
Department of Transportation - Federal Aviation Administration

Supplemental Type Certificate

Number SA01933LA

This Certificate issued to **Garmin AT, Inc.**
2345 Turner Road S.E.
Salem, Oregon 97302

*certifies that the change in the type design for the following product with the limitations and conditions therefor as specified hereon meets the airworthiness requirements of Part * of the Regulations*

Original Product Type Certificate Number: * See attached Approved Model List (AML)

Make: No. SA01933LA for list of approved aircraft

Model: models and applicable airworthiness regulations.

Description of Type Design

Change: Installation of Garmin Model 400W / 500W Series GPS-WAAS Navigation System in accordance with FAA Approved Garmin 400W Series Master Data List, Drawing No.: 005-C0221-00, Revision "A", dated October 31, 2006, or later FAA approved revision; or FAA Approved Garmin 500W Series Master Data List, Drawing No.: 005-C0221-01, Revision "A", dated October 31, 2006, or later FAA approved revision. For Garmin 400W installations: FAA Approved Garmin 400W Series Airplane Flight Manual Supplement, Document No.: 190-00356-63, Revision "Original", dated November 6, 2006, or later FAA approved revision. For Garmin 500W installation: FAA Approved Garmin 500W Series Airplane Flight Manual Supplement, Document No.: 190-00357-63, Revision "Original", dated November 6, 2006, or later FAA approved revision.

Limitations and Conditions: This approval should not be incorporated in any aircraft unless it is determined that the interrelationship between this installation and any previous approved configuration will not introduce any adverse effect upon the airworthiness of the aircraft. If the holder agrees to permit another person to use this certificate to alter the product, the holder shall give the other person written evidence of that permission.

This certificate and the supporting data which is the basis for approval shall remain in effect until surrendered, suspended, revoked or a termination date is otherwise established by the Administrator

Date of application: January 31, 2006

Date of issuance: November 6, 2006

Date reissued:

Date amended:

By direction of the Administrator

(Signature)

Manager, Systems & Equipment Branch, Los Angeles Aircraft Certification Office

Any alteration of this certificate is punishable by a fine of not exceeding $1,000, or imprisonment not exceeding 3 years, or both.

This certificate may be transferred in accordance with FAR 21.47.

500W Series

Instructions for Continued Airworthiness

Document Number 190-00357-65 Rev. A

Garmin Ltd. Or its subsidiaries
c/o Garmin International, Inc.
1200 E. 151st Street
Olathe, Kansas 66062 USA

Record of Revision

Rev.	Date	Description of Change
1	10-19-06	Initial Release
A	11-03-06	Revision for STC Issuance

1. INTRODUCTION 3
1.1 PURPOSE 3
1.2 Scope 3
1.3 Document Control 3
1.4 Airworthiness Limitations Section 3
1.5 Permission to Use Certain Documents 3
1.6 Definitions 3
2. INSTRUCTIONS FOR CONTINUED AIRWORTHINESS 4
2.1 Introduction 4
2.2 Description of Alteration 4
2.3 Control, Operating Information 5
2.4 Servicing Information 5
2.5 Periodic Maintenance Instructions 5
2.6 Troubleshooting Information 6
2.7 Removal and Replacement Information 6
2.8 Diagrams 6
2.9 Special Inspection Requirements 6
2.10 Application of Protective Treatments 6
2.11 Data Relative to Structural Fasteners 7
2.12 Special Tools 7
2.13 Additional Instructions for Aircraft Operating under FAR 121/135 7
2.14 Overhaul Period 7
2.15 ICA Revision and Distribution 7
2.16 Assistance 7
2.17 Implementation and Record Keeping 7

1. INTRODUCTION

1.1 PURPOSE

This document is designed for use by the installing agency of the Garmin Model 500W series GPS/WAAS Nav/Com as Instructions for Continued Airworthiness in response to Federal Aviation regulation (FAR) Part 23.1529, and Part 23 Appendix G. The ICA includes information required by the operator to adequately maintain the Garmin Models 500W series installed under Approved Model List (AML) STC SA01933LA.

1.2 Scope

This document identifies the Instruction for Continued Airworthiness for the modification of the aircraft for installation of the Garmin Models 500W series GPS/WAAS Nav/Com installed under Approved Model List (AML) STC SA01933LA.

1.3 Document Control

This document shall be released, archived, and controlled in accordance with the Garmin document control system. When this document is revised, refer to Section 2.15 for information on how to gain FAA acceptance or approval and how to notify customers of changes.

1.4 Airworthiness Limitations Section

There are no additional Airworthiness Limitations as defined in 14 CFR § 23, Appendix G. G23.4 that result from this modification. The Airworthiness Limitations section is FAA approved and specifies maintenance required under §§43.16 and 91.403 of the Federal Aviation Regulations unless an alternative program has been FAA approved.

1.5 Permission to Use Certain Documents

Permission is granted to any corporation or person applying for approval of a Garmin Models 500W series to use and reference appropriate STC documents to accomplish the Instructions for Continued Airworthiness and show compliance with STC engineering data. This permission does not construe suitability of the documents. It is the responsibility of the applicant to determine the suitability of the documents for the ICA.

1.6 Definitions

The following terminology is used within this document:

1) **AC:** Advisory Circular
2) **ACO:** Aircraft Certification Office
3) **AEG:** Aircraft Evaluation Group
4) **CFR:** Code of Federal Regulations
5) **DER:** Designated Engineering Representative
6) **FAA:** Federal Aviation Administration

7) **IAW:** In Accordance With
8) **ICA:** Instructions for Continued Airworthiness
9) **MFD:** Multi-Function Display unit
10) **PMI:** Primary Manufacturing Inspector
11) **POI:** Primary Operations Inspector
12) **STC:** Supplemental Type Certificate
13) **TC:** Type Certification or Type Certificate
14) **TSO:** Technical Standard Order

2. INSTRUCTIONS FOR CONTINUED AIRWORTHINESS

2.1 Introduction

Content, Scope, Purpose and Arrangement:	This document identifies the Instructions for Continued Airworthiness for the modification of the aircraft by installation of the Garmin Models 500W series GPS/WAAS Nav/Com.
Applicability:	Applies to aircraft altered by installation of the Garmin Models 500W series GPS/WAAS Nav/Com.
Definition of Abbreviations:	See Section 1.6
Precautions:	None
Units of measurement:	None
Referenced publications: *(or later FAA approved revisions)*	190-00357-02 Rev. A *500W Series Installation Manual* 005-C0221-01 Rev. A *500W Series STC Master Data List*
Retention:	This document, or the information contained within, will be included in the aircraft's permanent records.

2.2 Description of Alteration

The Garmin Model 500W Series GPS/WAAS Nav/Com unit is a 6 ¼ inch wide panel mounted unit with all the interface connections behind the instrument panel. Installation of the Garmin Model 500W series GPS/WAAS Nav/Com system interfaces, specific for the aircraft installation, is documented in the GNS 500W Series Post-Installation Checkout Log that is retained as part of the aircraft's permanent records. The 500W series units combine a large number of easily acceptable controls to use the color multi-function display, Nav and Com transceiver, GPS/WAAS navigator in a single unit.

2.3 Control, Operating Information

See the 500W Series Installation Manual, listed under the reference documentation in paragraph 2.1 of this document, for system operation and self-test information.

2.4 Servicing Information

None. In the event of system failure, return the unit to the manufacturer or an approved Garmin repair station.

2.5 Periodic Maintenance Instructions

The 500W Series units are designed to detect internal failure. A thorough self-test is executed automatically upon application of power to the units, and built-in test is continuously executed. Detected errors are indicated on the equipment via failure annunciations and maintenance is on-condition.

Operation of the 500W Series unit is not permitted unless an inspection as described in this section has been completed within the preceding 12 calendar months. Conduct a visual inspection on the 500W series unit and its wire harness to insure installation integrity:

1. Inspect the unit for security of attachment.
2. Inspect all knobs and buttons for legibility.
3. Inspect condition of wiring, routing and attachment/clamping.

2.5.1 Cleaning the Front Panel

The front bezel, keypad, and display can be cleaned with a soft cotton cloth dampened with clean water. DO NOT use any chemical-cleaning agents. Care should be taken to avoid scratching the surface of the display.

2.5.2 Display Backlight

The display backlight lamp is rated by the manufacturer as having a usable life of 20,000 hours. This life may be more or less than the rated time depending on the operating conditions of the 500W series unit. Over time, the backlight lamp may dim and the display may not perform as well in direct sunlight conditions. The user must determine by observation when the display brightness is not suitable for its intended use. Contact the Garmin factory repair station when the backlight lamp requires service.

2.5.3 Battery Replacement

The 500W series has an internal keep-alive battery that will last about 10 years. The battery is used for GPS system information. Regular planned replacement is not necessary. The 500W series will display a 'low battery' message when replacement is required. Once the low battery message is displayed, the battery should be replaced within 1 to 2 months.

If the battery is not replaced and becomes totally discharged, the 500W series unit will remain fully operational, but the GPS signal acquisition time may be increased. This acquisition time can be reduced by entering a new seed position each time the unit is powered on. There is no loss of function or accuracy of the 500W series unit with a dead battery.

The battery must be replaced by the Garmin factory repair station or factory authorized repair station.

2.6 Troubleshooting Information

If error indications are displayed on the 500W series unit, consult the Troubleshooting section contained in the 500W Series Installation Manual, listed under reference documentation in paragraph 2.1 of this document. The '500W Series Post-Installation Checkout Log' in the aircraft permanent records includes the configuration information for the installation. (See Section 5 in the 500W Series Installation Manual for a sample Log).

2.7 Removal and Replacement Information

If the 500W series unit is removed and reinstalled, verify that the 500W series unit power-up self-test sequence is successfully completed and no failure messages are annunciated.

If the 500W series unit is removed for repair and reinstalled, or if the 500W unit is removed and replaced with a different 500W series unit, then follow 'Post Installation Configuration & Checkout Procedures' procedures contained in the 500W Series Installation Manual listed in paragraph 2.1 of this document, and verify the 500W unit power-up self-test sequence is successfully completed and no failure messages are annunciated.

If any work has been done on the aircraft that could affect the system wiring, antenna cable, or any interconnected equipment, verify the 500W series unit power-up self-test sequence is successfully completed and no failure messages are annunciated.

To remove the 500W series unit from the mounting rack, insert a 3/32-inch hex drive tool into the access hole at the bottom of the unit face. Rotate the hex tool counterclockwise until the unit is forced out about 3/8 inches and can be freely pulled from the rack.

The 500W unit is installed in the rack by sliding it straight in until it stops, about 1 inch short of the final position. Insert the hex drive tool into the access hole at the bottom of the unit face. Rotate the hex tool clockwise while pressing on the left side of the bezel until the unit is firmly seated in the rack.

Note: There are no special handling requirements for the 500W series units.

2.8 Diagrams

Refer to the 500W Series Installation Manual (listed under reference documentation in section 2.1 of this document) for drawings applicable to this installation. Point to point wiring diagrams are in Appendix H of the 500W Series Installation Manual. Refer to the GNS 500W Series Post-Installation Checkout Log retained in the aircraft permanent for a list of the interfaced equipment. The antenna cables are routed between the 500W series unit and the antenna with disconnects at each unit. The antenna cable typically is routed behind interior panels in the fuselage.

2.9 Special Inspection Requirements

None, N/A.

2.10 Application of Protective Treatments

None, N/A.

2.11 Data Relative to Structural Fasteners

None, N/A.

2.12 Special Tools

No special tools are required for system checkout. See 500W Series Installation Manual listed in reference documentation in section 2.1 of this document.

2.13 Additional Instructions

None

2.14 Overhaul Period

The system does not require overhaul at a specific time period. Power on self-test and continuous BIT will monitor the health of the 500W series unit. If the unit indicates an internal failure, the unit may be removed and replaced. See troubleshooting section contained in the 500W Series Installation Manual, listed under reference documentation in paragraph 2.1 of this document.

2.15 ICA Revision and Distribution

To revise this ICA, a letter must be submitted to the ACO along with the revised ICA. The ACO will obtain AEG acceptance, and approve any revision to the Airworthiness Limitations Section 1.4. After FAA acceptance/approval, Garmin will release the revised ICA for customer use, and provide any required notification of the revision.

The latest revision of this document will be available on the Garmin website (www.garmin.com). A Garmin Service Bulletin, describing ICA revision, will be sent to dealers if revision is determined to be significant.

2.16 Assistance

Flight Standards Inspectors or the certificate holder's PMI have the required resources to respond to questions regarding this ICA. In addition, the customer may refer questions regarding this equipment and its installation to the manufacturer, Garmin. Garmin customer assistance may be contacted during normal business hours via telephone 913-397-8200 or email from the Garmin web site at www.garmin.com.

2.17 Implementation and Record Keeping

Modification of an aircraft by this Supplemental Type Certificate obligates the aircraft operator to include the maintenance information provided by this document in the operator's aircraft maintenance manual and/or the operator's aircraft scheduled maintenance program.

US Department of Transportation
Federal Aviation Administration

MAJOR REPAIR AND ALTERATION
(Airframe, Powerplant, Propeller, or Appliance)

Form Approved
OMB No. 2120-0020

For FAA Use Only

Office Identification
MSP FSDO

INSTRUCTIONS: Print or type all entries. See FAR 43.9 Appendix B, and AC 43.9-1 (or subsequent revision thereof) for instructions and disposition of this form. This report is required by law (49 U.S.C. 1421). Failure to report can result in a civil penalty not to exceed $1,000 for each such violation (Section 901 Federal Aviation Act of 1958).

1. Aircraft	Make: Cessna	Model: 421C
	Serial No.: 421C1241	Nationality and Registration Mark: USA N40ME
2. Owner	Name *(As shown on registration certificate)*: Toby E. Marcovich, S.C.	Address *(As shown on registration certificate)*: 19A Constellation Dr. Laconia, NH 03246-4082

3. For FAA Use Only

THE DATA IDENTIFIED HEREIN COMPLIES WITH APPLICABLE AIRWORTHINESS REQUIREMENTS AND IS APPROVED ONLY FOR THE ABOVE DESCRIBED AIRCRAFT SUBJECT TO CONFORMITY INSPECTION BY A PERSON AUTHORIZED IN FAR 43.7.

1/21/05 — DATE
MSP FSDO — FAA INSPECTOR

4. Unit Identification / **5. Type**

Unit	Make	Model	Serial No.	Repair	Alteration
AIRFRAME	~~~~~~~~~~ *(As described in Item 1 above)* ~~~~~~~~~~				X
POWERPLANT					
PROPELLER					
APPLIANCE	Type				
	Manufacturer				

6. Conformity Statement

A. Agency's Name and Address	B. Kind of Agency	C. Certificate No.
R.C. Avionics 2161 Missouri Row Blaine, MN 55449	[ ] U.S. Certified Mechanic [ ] Foreign Certified Mechanic [X] Certificated Repair Station [ ] Manufacturer	KP52996M

D. I certify that the repair and/or alteration made to the unit(s) identified in item 4 above and described on the reverse or attachments hereto have been made in accordance with the requirements of Part 43 of the U.S. Federal Aviation Regulations and that the information furnished herein is true and correct to the best of my knowledge.

Date: 01/20/05

Signature of Authorized Individual: Andrew John Boyer

7. Approval for Return to Service

Pursuant to the authority given persons specified below, the unit identified in item 4 was inspected in the manner prescribed by the Administrator of the Federal Aviation Administration and is [X] APPROVED [ ] REJECTED

BY						
	[ ]	FAA Flt. Standards Inspector	[ ]	Manufacturer	[ ]	Inspection Authorization
	[ ]	FAA Designee	[X]	Repair Station	[ ]	Person Approved by Transport Canada Airworthiness Group

Other *(Specify)*

Date of Approval or Rejection	Certificate or Designation No.	Signature of Authorized Individual
02/08/05	KP52996M	Andrew John Boyer

FAA Form 337 (12-88)

NOTICE

Weight and balance or operating limitation changes shall be entered in the appropriate aircraft record. An alteration must be compatible with all previous alterations to assure continued conformity with the applicable airworthiness requirements.

B. Description of Work Accomplished

(If more space is required, attach additional sheets, Identify with aircraft nationality and registration mark and date work accomplished.)

RC AVIONICS FAA CRS KP52996M INSTALLED THE FOLLOWING:

DISCRIPTION	REFERENCE
STRIKE FINDER Display SF 2000, PN 2000-021-009 Sensor , PN 2000-022	Insight Avionics Installation Manual 2000-10 Rev. 1.7.

The above installation conforms to acceptable methods i.e. AC-43-13-2A, where applicable, chapter 2, paragraph 23, section a, b, c, & d, paragraph 27, Section a, b, c, d, & e. Ramp checked the above installation, installed systems perform to manufactures specifications, and doesn't interfer with other aircraft systems. Added electrical load doesn't exceed 80% of aircrafts charging system capabilities.

Display/Processor is mounted in RH instrument panel below RH Airspeed indicator, F.S. 111. Antenna is mounted at F.S. 231using doubler fabricated IAW DER drawing. Heading information provided by IG-895A . System power is from a 2 amp circuit breaker on avionics bus. Added electrical load doesn't exceed 80% of aircraft charging systems capabilities.

STRIKE FINDER Pilot's Guide User's Guide PN 2000-01 supplied.

Updated aircraft weight / balance and equipment list. Logbook entry made.

Refer to aqttached sheet for Instructions for Continued Airworthiness.

----------END----------

☒ Additional Sheets Are Attached

R.C.AVIONICS
Exceeding the standards.

ANOKA COUNTY AIRPORT
2161 Missouri Row
Blaine, MN 55449

CRS KP52996M
(763) 780-1428
WWW.RCAVIONICS.COM

Instructions for Continued Airworthiness

OWNER NAME: Toby E. Marcovich
ADDRESS: 19A Constellation Dr.
Laconia, NH 03246-4082
DATE: 01/20/05

REGISTRATION: N40ME
MANUFACTURER: CESSNA
MODEL: 421
SERIAL NUMBER: 421C1241

1) Introduction: Aircraft listed above, modified IAW manufactures directions as listed in reference material at top of block 8 on 337 form this date.

2) Description: The STRIKEFINDER is a TSO certified airborne passive thunderstorm detection system. The sensor maps electrical discharge activity 360 degrees around the aircraft to a distance of 200 nautical miles.

3) Control, operation information: Refer to Insight Avionics User's Guide PN 2000-01.

4) Servicing information: No user serviceable parts contact Insight Avionics at 716-852-3217.

5) Maintenance Instructions: Refer to Installation Manual PN 2000-10 Chapter 2, No scheduled maintenance is required to ensure continued airworthiness. Annual checkout recommended.

6) Trouble shooting information: Trouble shooting by qualified personnel only, refer to Install Manual Section 2.11.

7) Removal and replacement information: Unit mounted instrument panel hole and is secured to the panel with 4 6/32 screws.

8) Diagrams of access plates: NA

9) Special inspection requirements: NA

10) Application of protective treatments after inspection and/or maintenance: NA

11) Data of structural fasteners: NA

12) Special tools: NA

13) Commuter category only, a) electrical load, b) flight control balance, c) primary/secondary structures, d) special repair methods applicable to the airplane. NA

14) Recommended overhaul periods: No additional overhaul time limitations.

15) Airworthiness Limitations: No additional airworthiness limitations.

16) Revision: Submit revised ICA to local FISDO, with copy of 337. Contact FISDO for detailed instructions.

17) Assistance: Small Aircraft (General Aviation) Kansas City AEG, (816) 426-3934

18) Implementation and record keeping: The owner/operator operating under part 91 is responsible for ensuring that this ICA is made part of the aircraft inspection program.

U.S. DEPARTMENT OF TRANSPORTATION FEDERAL AVIATION ADMINISTRATION STATEMENT OF COMPLIANCE WITH THE FEDERAL AVIATION REGULATIONS	DATE 02/04/05

AIRCRAFT OR AIRCRAFT COMPONENT IDENTIFICATION

MAKE	MODEL NO.	TYPE *(Airplane, Radio, Helicopter, etc.)*	NAME OF APPLICANT
CESSNA	421C	AIRPLANE	R. C. AVIONICS

LIST OF DATA

IDENTIFICATION	TITLE
DRAWING REF: N40ME-020405 Rev N/C 02/04/05	"STRIKE FINDER SF2000 ANTENNA DOUBLER DESIGN & INSTALLATION" APPROVAL IS FOR ONE AIRCRAFT; S/N 421C1241: T/N N40ME Notes: This approval is for engineering design data only and is not an installation approval. It indicates the data listed above demonstrates compliance only with the regulations specified by paragraph and subparagraph listed below as 'APPLICABLE REQUIREMENTS'. (Compliance with additional regulations not listed here may be required).

PURPOSE OF DATA

IN SUPPORT OF A MAJOR ALTERATION TO ADD AN ANTENNA TO SHOW COMPLIANCE WITH THE FOLLOWING REGULATIONS

APPLICABLE REQUIREMENTS (List specific sections)

CFR 14 FAR Part 23.301(a)(b)(c), Amdt 23-48; .303, Amdt 23-0; .305(a)(b), Amdt 23-45; .307(a), Amdt 23-0; .365(a)(b)(d), Amdt 23-0; .601, Amdt 23-0; .603(a)(b), Amdt 23-23; .605(a), Amdt 23-23; .607(a)(b)(c), Amdt 23-0; .609(a), Amdt 23-0; .613(a)-(e), Amdt 23-45; .625(a)(b)(c), Amdt 23-7;

CERTIFICATION - Under authority vested by direction of the Administrator and in accordance with conditions and limitations of appointment under Part 183 of the Federal Aviation Regulations, data listed above and on attached sheets numbered N/A have been examined in accordance with established procedures and found to comply with applicable requirements of the Federal Aviation Regulations.

I (~~we~~) Therefore ☐ Recommend approval of these data

☒ Approve these data

SIGNATURE(S) OF DESIGNATED ENGINEERING REPRESENTATIVE(S)	DESIGNATION NUMBERS(S)	CLASSIFICATION(S)
TREVOR J. STRONG	DERT605818NM	STRUCTURES *(A1, A4, P1, P4)*

FAA Form 8110-3 (11-70) SUPERSEDES PREVIOUS EDITION GPO 901-413

DWG. NO.	SH	REV.
N40ME-020405	1	N/C

REVISIONS

ZONE	REV.	DESCRIPTION	DATE	APPROVED

STRIKE FINDER SF2000 ANTENNA DOUBLER DESIGN & INSTALLATION

(FOR ONE AIRCRAFT ONLY – A CESSNA 421C, S/N 421C1241, T/N 40ME)

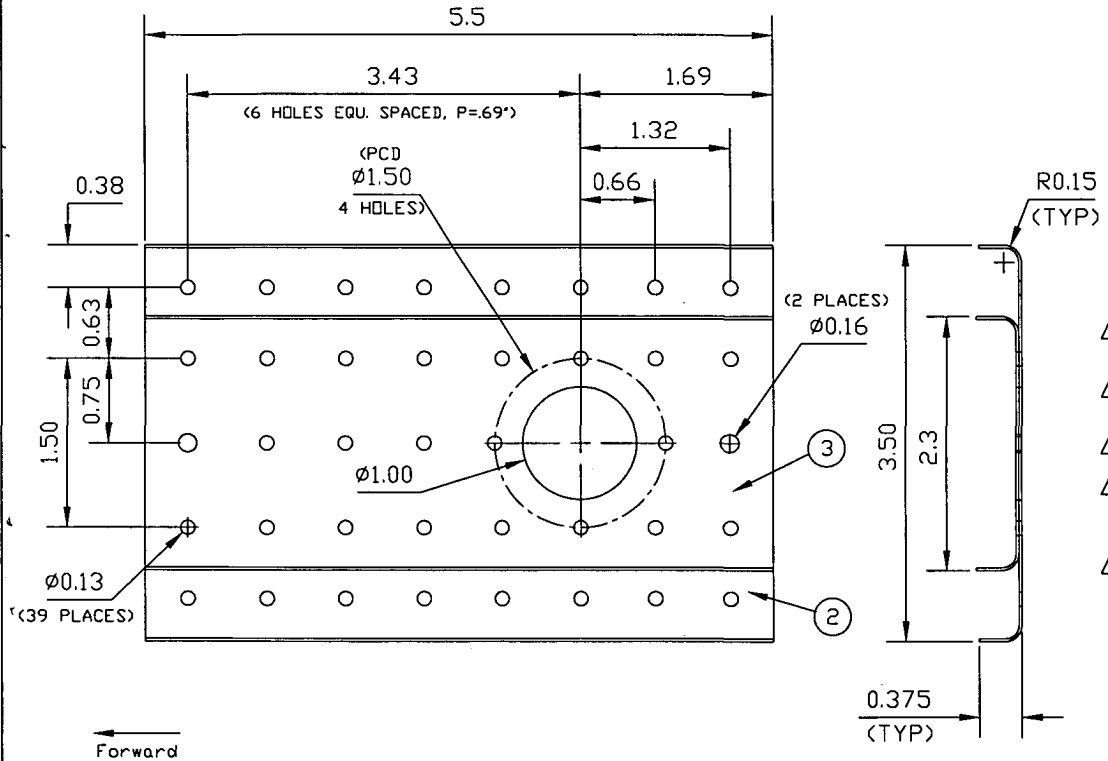

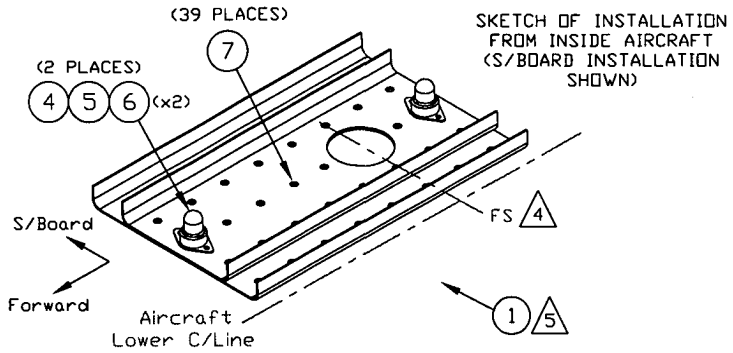

SKETCH OF INSTALLATION FROM INSIDE AIRCRAFT (S/BOARD INSTALLATION SHOWN)

NOTES

1. CHEM FILM DOUBLERS AND ANY BARE METAL PER MIL-C-5541 (OR EQUIVALENT)
2. EPOXY PRIME DOUBLERS AND ANY BARE METAL PER MIL-P-23377G (OR EQUIVALENT)
3. WET INSTALL RIVETS TO MIL-S-8802 (OR EQUIVALENT)
4. DOUBLERS INSTALLED AGAINST INNER SKIN PANEL BETWEEN FRAMES AT – FS 232 ALONG A/C LOWER CENTER LINE UP TO LBL/RBL 8.0 (+/-3.0") AS PREFERRED
5. INSTALL INSIGHT AVIONICS STRIKE FINDER SF2000 ANTENNA, P/N 2000-022, (NOT SHOWN), AS PER MANUFACTURER INSTRUCTIONS. PROTECT FASTENER HEADS USING RTV SEALANT, (DOW CORNING #732 – WHITE, OR EQUIVALENT) TO PREVENT MOISTURE INGRESS DURING OPERATION. SEAL PERIPHERY OF ANTENNA BASE WITH PR-1422B1/2, (OR EQUIVALENT) TO COMPLETE INSTALLATION

QTY	PART NO	DESCRIPTION	MATERIAL	SIZE / SPECIFICATION	ITEM NO.
39	-	#1/8" SOLID ALUMINUM C/S RIVET	NAS1097AD4-X		7
4	-	#3/32" SOLID ALUMINUM C/S RIVET	NAS1097AD3-X		6
2	-	#8-32 SCREW	NAS623-06		5
2	-	DOME NUT PLATE	NAS1473-06		4
1	-3	STATIC DOUBLER	AL 2024-T3 t=.032"		3
1	-1	FATIGUE DOUBLER	AL 2024-T3 t=.032"		2
	-000	STRIKE FINDER SF2000 ANTENNA INSTALLATION			1

NEXT ASSY	USED ON
N/A	
APPLICATION	

UNLESS OTHERWISE SPECIFIED DIMENSIONS ARE IN INCHES TOLERANCES ARE: DECIMALS .XX ± .02 .XXX ± .010 ANGLES ± 0.30°

MATERIAL: AL 2024-T3

FINISH: 1 2

DO NOT SCALE ON DRAWING

CONTRACT NO.

APPROVALS		DATE
DRAWN	T. STRONG	02/04/05
CHECKED	T. STRONG	02/04/05
ENGINEER	T. STRONG	02/04/05
APPROVED	T. STRONG	02/04/05

STRONG Aero Engineering
www.strongaero.com

TITLE: STRIKE FINDER SF2000 ANTENNA DOUBLER DESIGN & INSTALLATION

DWG CODE

SIZE 11" x 17" | CAGE CODE | DWG. NO. N40ME-020405 | REV. N/C

SCALE N/A | FILE: N40ME-020405.pdf | SHEET 1 OF 1

KEY:

(X) – ITEM NO. △X – NOTE NO.

US Department of Transportation
Federal Aviation Administration

MAJOR REPAIR AND ALTERATION
(Airframe, Powerplant, Propeller, or Appliance)

Form Approved
OMB No. 2120-0020

For FAA Use Only

Office Identification
MSP FSDO

INSTRUCTIONS: Print or type all entries. See FAR 43.9 Appendix B, and AC 43.9-1 (or subsequent revision thereof) for instructions and disposition of this form. This report is required by law (49 U.S.C. 1421). Failure to report can result in a civil penalty not to exceed $1,000 for each such violation (Section 901 Federal Aviation Act of 1958).

1. Aircraft	Make: **Cessna**	Model: **421C**
	Serial No.: **421C1241**	Nationality and Registration Mark: **USA N40ME**
2. Owner	Name *(As shown on registration certificate)*: **Toby E. Marcovich, S.C.**	Address *(As shown on registration certificate)*: **19A Constellation Dr., Laconia< NH 03246-4082**

3. For FAA Use Only

THE DATA IDENTIFIED HEREIN COMPLIES WITH APPLICABLE AIRWORTHINESS REQUIREMENTS AND IS APPROVED ONLY FOR THE ABOVE DESCRIBED AIRCRAFT SUBJECT TO CONFORMITY INSPECTION BY A PERSON AUTHORIZED IN FAR 43.7

1/21/05 [signature] MSP FSDO

DATE FAA INSPECTOR

4. Unit Identification / **5. Type**

Unit	Make	Model	Serial No.	Repair	Alteration
AIRFRAME	~~~~~~~~~~ *(As described in Item 1 above)* ~~~~~~~~~~				X
POWERPLANT					
PROPELLER					
APPLIANCE	Type / Manufacturer				

6. Conformity Statement

A. Agency's Name and Address	B. Kind of Agency		C. Certificate No.
R.C. Avionics **2161 Missouri Row** **Blaine MN. 55449**		U.S. Certified Mechanic	**KP52996M**
		Foreign Certified Mechanic	
	X	Certificated Repair Station	
		Manufacturer	

D. I certify that the repair and/or alteration made to the unit(s) identified in item 4 above and described on the reverse or attachments hereto have been made in accordance with the requirements of Part 43 of the U.S. Federal Aviation Regulations and that the information furnished herein is true and correct to the best of my knowledge.

Date: **01/20/05**

Signature of Authorized Individual: Andrew John Bouget

7. Approval for Return to Service

Pursuant to the authority given persons specified below, the unit identified in item 4 was inspected in the manner prescribed by the Administrator of the Federal Aviation Administration and is ☒ APPROVED ☐ REJECTED

BY						
		FAA Flt. Standards Inspector		Manufacturer		Inspection Authorization	Other *(Specify)*
		FAA Designee	X	Repair Station		Person Approved by Transport Canada Airworthiness Group	

Date of Approval or Rejection	Certificate or Designation No.	Signature of Authorized Individual
02/02/05	**KP52996M**	Andrew John Bouget

FAA Form 337 (12-88)

NOTICE

Weight and balance or operating limitation changes shall be entered in the appropriate aircraft record. An alteration must be compatible with all previous alterations to assure continued conformity with the applicable airworthiness requirements.

B. Description of Work Accomplished
(If more space is required, attach additional sheets, Identify with aircraft nationality and registration mark and date work accomplished.)

RC AVIONICS FAA CRS KP52996M INSTALLED THE FOLLOWING:

Evaluated GNS-530 PN: 011-00550-10 Global Positioning System, previously installed under FAA form 337, Dated January 2005 for VFR use only. This system meets the requirements of TSO C129 (A1), AC 20-138 and is approved for IFR enroute, terminal, and non precision approach operations.

GNS-530 is connected to a IG-895A HSI. Information on HSI can be VOR/ILS or GPS as selected on the GNS-530 front panel. Altitude information is provided via gray code from an E-601 Encoding Altimeter. Internal annuciators are in clear view of the pilots. Forced air cooling is provided to GNS-530.

Performed post installation configuration and checkout procedure IAW GARMIN 500 series installation manual PN: 190-00181-02 Section 5.

This system was flight tested and meets the requirements of AC 20.138, Paragraph 8.c.(2) (iv)

FAA Aproved Flight Manual Supplement, dated: 1-20-05 installed in Aircraft Flight Manual.

Pilot Operating Guide 190-00181-00 is available to the pilot in the aircraft.

A logbook entry has been made stating this approval.

----------END----------

RECEIVED
FEB 03 2005
MSP FSDO

☐ Additional Sheets Are Attached

R.C. Avionics
Anoka County Airport
2161 Missouri Row
Blaine, MN 55449

N Number: 40ME

FLIGHT TEST REPORT

Flight Data Evaluation Report for IFR Certification

GPS Model GNS-530 **SN** 78412692 **Level** 6

Aircraft Model 421C **SN** 421C1241 **Reg** N40ME

Verify continuity of navigation data during 360 degree left and right turns at 30 degrees of bank.
At no time during these maneuvers shall the GPS fail to provide navigation data.

Passed X **Failed** _____

Conduct the following three published non-precision instrument approaches using approach fixes
Obtained from the internal database and verify proper operation of the equipment approach environment.

Approach #1 (name) GPS Ry 31 SOW **Passed** X **Failed** _____
Approach #2 (name) IAS Ry 9 DLH **Passed** X **Failed** _____
Approach #3 (name) GPS Ry 13 SOW **Passed** X **Failed** _____
VOR Ry 3 DLH PASSED X

Monitor the displayed cross-track error and distance to the waypoint during the enroute and approach
Transition to verify that the flight technical error (FTE) is less then 1 nmi with and without autopilot.

Passed X **Failed** _____

Monitor the displayed cross-track error and distance to waypoint during approach operations of the flight
And verify that the FTE is less than .25 nmi with and without autopilot.

Passed X **Failed** _____

I certify that the above recorded test flight information is correct and that the GPS equipment, as installed,
Meets the above listed performance requirements.

Pilot Signature R. Hanacovich **Date** 1/26/05

US Department of Transportation
Federal Aviation Administration

MAJOR REPAIR AND ALTERATION
(Airframe, Powerplant, Propeller, or Appliance)

Form Approved
OMB No. 2120-0020

For FAA Use Only

Office Identification
MSP FSDO

INSTRUCTIONS: Print or type all entries. See FAR 43.9 Appendix B, and AC 43.9-1 (or subsequent revision thereof) for instructions and disposition of this form. This report is required by law (49 U.S.C. 1421). Failure to report can result in a civil penalty not to exceed $1,000 for each such violation (Section 901 Federal Aviation Act of 1958).

1. Aircraft	Make: **Cessna**	Model: **421C**
	Serial No.: **421C1241**	Nationality and Registration Mark: **USA N40ME**
2. Owner	Name *(As shown on registration certificate)*: **Toby E. Marcovich, S.C.**	Address *(As shown on registration certificate)*: **19A Constellation Dr. Laconia, NH 03246-4082**

3. For FAA Use Only

THE DATA IDENTIFIED HEREIN COMPLIES WITH APPLICABLE AIRWORTHINESS REQUIREMENTS AND IS APPROVED ONLY FOR THE ABOVE DESCRIBED AIRCRAFT SUBJECT TO CONFORMITY INSPECTION BY A PERSON AUTHORIZED IN FAR 43.7.

1/21/05 [signature] MSP FSDO
DATE FAA INSPECTOR

4. Unit Identification				**5. Type**	
Unit	Make	Model	Serial No.	Repair	Alteration
AIRFRAME	~~~~~~~~~~ *(As described in Item 1 above)* ~~~~~~~~~~				X
POWERPLANT					
PROPELLER					
APPLIANCE	**Type** / **Manufacturer**				

6. Conformity Statement

A. Agency's Name and Address	B. Kind of Agency		C. Certificate No.
R.C. Avionics **2161 Missouri Row** **Blaine, MN 55449**		U.S. Certified Mechanic	**KP52996M**
		Foreign Certified Mechanic	
	X	Certificated Repair Station	
		Manufacturer	

D. I certify that the repair and/or alteration made to the unit(s) identified in item 4 above and described on the reverse or attachments hereto have been made in accordance with the requirements of Part 43 of the U.S. Federal Aviation Regulations and that the information furnished herein is true and correct to the best of my knowledge.

Date	Signature of Authorized Individual
01/20/05	Andrew John Bouge

7. Approval for Return to Service

Pursuant to the authority given persons specified below, the unit identified in item 4 was inspected in the manner prescribed by the Administrator of the Federal Aviation Administration and is ☒ APPROVED ☐ REJECTED

BY							Other *(Specify)*
		FAA Flt. Standards Inspector		Manufacturer		Inspection Authorization	
		FAA Designee	X	Repair Station		Person Approved by Transport Canada Airworthiness Group	

Date of Approval or Rejection	Certificate or Designation No.	Signature of Authorized Individual
01/24/05	**KP52996M**	Andrew John Bouge

FAA Form 337 (12-88)

NOTICE

Weight and balance or operating limitation changes shall be entered in the appropriate aircraft record. An alteration must be compatible with all previous alterations to assure continued conformity with the applicable airworthiness requirements.

B. Description of Work Accomplished

(If more space is required, attach additional sheets, Identify with aircraft nationality and registration mark and date work accomplished.)

RC AVIONICS FAA CRS KP52996M INSTALLED THE FOLLOWING:

DISCRIPTION		REFERENCE
GNS-530	(NAV/COM/GPS)	GARMIN Install Manual PN 190-00181-02 Rev K.
GA-56	(ANTENNA)	STC # SA00864WI
ACF 328	(COOLING FAN)	Sandia Aerospace Installation Manual ACF328-IS Rev D.

The above installation conforms to acceptable methods i.e. AC-43-13-2A, where applicable, chapter 2, paragraph 23, section a, b, c, & d; paragraph 27, section a, b, c, d, & e. Ramp checked the above installation, installed systems perform to manufactures specifications, and doesn't interfere with other aircraft systems. Added electrical load doesn't exceed 80% aircraft charging system capabilities.

GNS 530 is mounted in radio stack above the audio panel on the left side of the center radio stack. Annuciators required for IFR are displayed on Garmin GNS-530 and are in full view from either pilot position. GNS-530 is connected to a IG-895A HSI . Information on HSI can be VOR/ILS or GPS as selected on GNS-530 front panel.
Altitude information is provided from a EA-601 encoding altimeter.
Forced air cooling is provided from the ACF 328 cooling fan to the GNS-530.

ACF 328 cooling fan is mounted at fuselage station 108, right butt line 21, above glove box.

GA-56 GPS antenna is mounted on the top of the fuselage at station 152 using approved DER drawing N40ME-011105 provided by Strong Aero Engineering.

Installed placard "GNS 530 GPS LIMITED TO VFR USE ONLY" in clear view of pilot.

Performed post installation ground and flight tests, IAW AC 20.138, Paragraph 7.c.(2). Normal operation indicated.

Follow on IFR enroute and non-precision approach approval with flight manual supplement will follow.

Removed ARC Com C-1038A Control Head and RT-1038A Tranceiver.
Removed ARC Nav C-1048A Control Head and R-1048A Receiver.
Removed ARC R-1043A G/S Receiver.
Removed ARNAV R-21 Loran Receiver and Antenna.
Removed RS08-001 Switching Relay.

Updated aircraft weight / balance and equpitment list. Logbook entry made.

Refer to attached sheet for Instructions for Continued Airworthiness.

----------END----------

☒ Additional Sheets Are Attached

R.C.AVIONICS

Exceeding the standards.

ANOKA COUNTY AIRPORT
2161 Missouri Row
Blaine, MN. 55449

CRS KP52996M
(763) 780-1428
WWW.RCAVIONICS.COM

Instructions for Continued Airworthiness

OWNER NAME: Tobt E. Marcovich

REGISTRATION: N40ME

ADDRESS: 19A Constellation Dr.
Laconia, NH 03246-4082

DATE: 1/20/05

MANUFACTURER: Cessna
MODEL: 421C
SERIAL NUMBER: 421C1241

1) Introduction: Aircraft listed above, modified IAW manufactures directions as listed in reference material at top of block 8 on 337 form this date.

2) Description: #1 GNS 530 installed in radio panel. GPS or VOR/ILS selectable to IG-895A HSI.

3) Control, operation information: Refer to GARMIN GNS 530 Pilot's Guide PN 190-00181-00 Rev C and FAA approved Flight Manual Supplement.

4) Servicing information: No user serviceable parts contact GARMIN Customer Service department 913-397-8200.

5) Maintenance Instructions: NA

6) Trouble shooting information: Trouble shooting by qualified personnel only, refer to Install Manual section 5 for checkout procedure.

7) Removal and replacement information: Unit is installed into the rack by sliding it straight in until it stops, about 1 inch short of final position, A 3/32" hex drive tool is then inserted into the access hole at the bottom of the unit face. Rotate the hex tool clockwise while pressing on the left side of the bezel until the unit is firmly seated in the rack. It may be necessary to insert the hex drive tool into the access hole and rotate it 90°. To remove the unit from the rack, insert the hex drive tool into the access hole on the unit face and rotate counterclockwise until the unit is forced out about 3/8" and can be freely pulled from the rack. Be sure not to over tighten the unit into the rack. The application of hex drive tool torque exceeding 15 in/lbs. can damage the locking mechanism.

8) Diagrams of access plates: NA

9) Special inspection requirements: NA

10) Application of protective treatments after inspection and/or maintenance: NA

11) Data of structural fasteners: NA

12) Special tools: NA

13) Commuter category only, a) electrical load, b) flight control balance, c) primary/secondary structures, d) special repair methods applicable to the airplane. NA

14) Recommended overhaul periods: No additional overhaul time limitations.

15) Airworthiness Limitations: No additional airworthiness limitations.

16) Revision: Submit revised ICA to local FSDO, with copy of 337. Contact FSDO for detailed instructions.

17) Assistance: Small Aircraft (General Aviation) Kansas City AEG, (816) 426-3934

18) Implementation and record keeping: The owner/operator operating under part 91 is responsible for ensuring that this ICA is made part of the aircraft inspection program.

US Department of Transportation
Federal Aviation Administration

MAJOR REPAIR AND ALTERATION
(Airframe, Powerplant, Propeller, or Appliance)

Form Approved
OMB No. 2120-0020

For FAA Use Only
Office Identification
MSP FSDO G2-15 ST

INSTRUCTIONS: Print or type all entries. See FAR 43.9, FAR 43 Appendix B, and AC 43.9-1 (or subsequent revision thereof) for instructions and disposition of this form. This report is required by law (49 U.S.C. 1421). Failure to report can result in a civil penalty not to exceed $1,000 for each such violation (Section 901 Federal Aviation Act of 1958).

1. Aircraft	Make: CESSNA	Model: 421C
	Serial No.: 421C1241	Nationality and Registration Mark: N 40ME
2. Owner	Name *(As shown on registration certificate)*: Sunpine properties	Address *(As shown on registration certificate)*: 3563 Ely Lake drive, Eveleth mn 55734

3. For FAA Use Only

4. Unit Identification / **5. Type**

Unit	Make	Model	Serial No.	Repair	Alteration
AIRFRAME	(As described in Item 1 above)			X	
POWERPLANT					
PROPELLER					
APPLIANCE	Type / Manufacturer				

6. Conformity Statement

A. Agency's Name and Address	B. Kind of Agency	C. Certificate No.
Nate Richmond 62 Buss Court Apple Creek, OH 44606	XX U.S. Certificated Mechanic Foreign Certificated Mechanic Certificated Repair Station Manufacturer	A&P 391761366

D. I certify that the repair and/or alteration made to the unit(s) identified in item 4 above and described on the reverse or attachments hereto have been made in accordance with the requirements of Part 43 of the U.S. Federal Aviation Regulations and that the information furnished herein is true and correct to the best of my knowledge.

Date	Signature of Authorized Individual
1-17-96	Nate W. Richmond

7. Approval for Return To Service

Pursuant to the authority given persons specified below, the unit identified in item 4 was inspected in the manner prescribed by the Administrator of the Federal Aviation Administration and is ☒ APPROVED ☐ REJECTED

BY							Other *(Specify)*
		FAA Flt. Standards Inspector		Manufacturer	XX	Inspection Authorization	
		FAA Designee		Repair Station		Person Approved by Transport Canada Airworthiness Group	

Date of Approval or Rejection	Certificate or Designation No.	Signature of Authorized Individual
1-17-96	446629247	Benny Wise

FAA Form 337 (12-88)

NOTICE

Weight and balance or operating limitation changes shall be entered in the appropriate aircraft record. An alteration must be compatible with all previous alterations to assure continued conformity with the applicable airworthiness requirements.

8. Description of Work Accomplished

(If more space is required, attach additional sheets. Identify with aircraft nationality and registration mark and date work completed.)

Repaired lower cabin door assy P/N: 5711165-2 by replaceing the following: door frame P/N: 5711145-4, upper forward step reinforcement P/N:5711165-11, upper aft step reinforcement P/N: 5711165-12, lower forward step reinforcement P/N:5711165-13,lower aft step reinforcement P/N: 5711165-14, lower step stop P/N: 5711163-2 and upper step stop P/N: 5711163-3.

All work was preformed in accordance with Cessna Service Manual #D2525-18-13 Chapter 15 and AC43.13-1A chapter 2, section 3.

END

Installed and checked by: [signature] (Signature) AP 469965606 (License #) 4-1-97 (Date)

RECEIVED
APR 02 1997
MSP FSDO

☐ Additional Sheets Are Attached

☆U.S. GOVERNMENT PRINTING OFFICE: 1992-769-012/60157

FAA AIRCRAFT REGISTRY
CAMERA NO. 3 DATE: 1-30-94

UNITED STATES OF AMERICA
DEPARTMENT OF TRANSPORTATION—FEDERAL AVIATION ADMINISTRATION

STANDARD AIRWORTHINESS CERTIFICATE

1. NATIONALITY AND REGISTRATION MARKS	2. MANUFACTURER AND MODEL	3. AIRCRAFT SERIAL NUMBER	4. CATEGORY
N40ME	CESSNA 421C	421C1241	NORMAL

5. AUTHORITY AND BASIS FOR ISSUANCE
This airworthiness certificate is issued pursuant to the Federal Aviation Act of 1958 and certifies that, as of the date of issuance, the aircraft to which issued has been inspected and found to conform to the type certificate therefor, to be in condition for safe operation, and has been shown to meet the requirements of the applicable comprehensive and detailed airworthiness code as provided by Annex 8 to the Convention on International Civil Aviation, except as noted herein.
Exceptions-

NONE

6. TERMS AND CONDITIONS
Unless sooner surrendered, suspended, revoked, or a termination date is otherwise established by the Administrator, this airworthiness certificate is effective as long as the maintenance, preventive maintenance, and alterations are performed in accordance with Parts 21, 43, and 91 of the Federal Aviation Regulations, as appropriate, and the aircraft is registered in the United States.

DATE OF ISSUANCE	FAA REPRESENTATIVE	DESIGNATION NUMBER
Replacement 03-09-82	John C. Vergenz	MSP FSDO GL-41

Any alteration, reproduction, or misuse of this certificate may be punishable by a fine not exceeding $1,000, or imprisonment not exceeding 3 years, or both. THIS CERTIFICATE MUST BE DISPLAYED IN THE AIRCRAFT IN ACCORDANCE WITH APPLICABLE FEDERAL AVIATION REGULATIONS.

FAA Form 8100-2 (7-67) FORMERLY FAA FORM 1362

U.S. Government Printing Office — 1976-629-526

FAA AIRCRAFT REGISTRY
CAMERA NO. 3 DATE: 1-30-91

FAA AIRCRAFT REGISTRY
CAMERA NO. 3 DATE: 1-30-91

UNITED STATES OF AMERICA
DEPARTMENT OF TRANSPORTATION—FEDERAL AVIATION ADMINISTRATION

STANDARD AIRWORTHINESS CERTIFICATE

1. NATIONALITY AND REGISTRATION MARKS	2. MANUFACTURER AND MODEL	3. AIRCRAFT SERIAL NUMBER	4. CATEGORY
N2726S	Cessna 421C	421C1241	Normal

5. AUTHORITY AND BASIS FOR ISSUANCE
This airworthiness certificate is issued pursuant to the Federal Aviation Act of 1958 and certifies that, as of the date of issuance, the aircraft to which issued has been inspected and found to conform to the type certificate therefor, to be in condition for safe operation, and has been shown to meet the requirements of the applicable comprehensive and detailed airworthiness code as provided by Annex 8 to the Convention on International Civil Aviation, except as noted herein.
Exceptions: None

6. TERMS AND CONDITIONS
Unless sooner surrendered, suspended, revoked, or a termination date is otherwise established by the Administrator, this airworthiness certificate is valid [illegible], preventative maintenance, and alterations are performed in accordance with Parts 21, 43, and 91 of the Federal Aviation Regulations, as appropriate, and the aircraft is registered in the United States.

DATE OF ISSUANCE	FAA REPRESENTATIVE	DESIGNATION NUMBER
3-9-82	Delegation Option Manufacturer, CE-4 By [illegible]	DOA CE-3

Any alteration, reproduction, or misuse of this certificate may be punishable by a fine not exceeding $1,000, or imprisonment not exceeding 3 years, or both. THIS CERTIFICATE MUST BE DISPLAYED IN THE AIRCRAFT IN ACCORDANCE WITH APPLICABLE FEDERAL AVIATION REGULATIONS.

FAA Form 8100-2 (7-67) FORMERLY FAA FORM 1362

FAA AIRCRAFT REGISTRY
CAMERA NO. 3 DATE: 1-30-91

FAA AIRCRAFT REGISTRY
CAMERA NO. 2 DATE: 6-6-89

U.S. DEPARTMENT OF TRANSPORTATION
FEDERAL AVIATION ADMINISTRATION

MAJOR REPAIR AND ALTERATION
(Airframe, Powerplant, Propeller, or Appliance)

Form Approved
Budget Bureau No. 04-R060.1

FOR FAA USE ONLY

OFFICE IDENTIFICATION

INSTRUCTIONS: Print or type all entries. See FAR 43.9, FAR 43 Appendix B, and AC 43.9-1 (or subsequent revision thereof) for instructions and disposition of this form.

1. AIRCRAFT	MAKE: CESSNA	MODEL: 421C
	SERIAL NO.: 421C-1241	NATIONALITY AND REGISTRATION MARK: U.S.A. N27265
2. OWNER	NAME (As shown on registration certificate): SUNPINE PROPERTIES- BOZICH	ADDRESS (As shown on registration certificate): 3563 ELY LAKE DRIVE EVELETH, MINNESOTA 55734

3. FOR FAA USE ONLY

4. UNIT IDENTIFICATION				5. TYPE	
UNIT	MAKE	MODEL	SERIAL NO.	REPAIR	ALTERATION
AIRFRAME	(As described in item 1 above)				XXX
POWERPLANT					
PROPELLER					
APPLIANCE	TYPE / MANUFACTURER				

6. CONFORMITY STATEMENT

A. AGENCY'S NAME AND ADDRESS	B. KIND OF AGENCY	C. CERTIFICATE NO.
Bradley N. Forseen P.O. Box 5141 Mt. Iron, MN 55768	X U.S. CERTIFICATED MECHANIC FOREIGN CERTIFICATED MECHANIC CERTIFICATED REPAIR STATION MANUFACTURER	AP471700870

D. I certify that the repair and/or alteration made to the unit(s) identified in item 4 above and described on the reverse or attachments hereto have been made in accordance with the requirements of Part 43 of the U.S. Federal Aviation Regulations and that the information furnished herein is true and correct to the best of my knowledge.

DATE: November 2, 1988

SIGNATURE OF AUTHORIZED INDIVIDUAL: Bradley N Forseen

7. APPROVAL FOR RETURN TO SERVICE

Pursuant to the authority given persons specified below, the unit identified in item 4 was inspected in the manner prescribed by the Administrator of the Federal Aviation Administration and is [X] APPROVED [ ] REJECTED

BY						
	FAA FLT. STANDARDS INSPECTOR		MANUFACTURER	X	INSPECTION AUTHORIZATION	OTHER (Specify)
	FAA DESIGNEE		REPAIR STATION		CANADIAN DEPARTMENT OF TRANSPORT INSPECTOR OF AIRCRAFT	

DATE OF APPROVAL OR REJECTION	CERTIFICATE OR DESIGNATION NO.	SIGNATURE OF AUTHORIZED INDIVIDUAL
Nov. 16, 1988	AP470580641IA	Rodney Johnson

FAA Form 337 (7-67) (8320)

FAA AIRCRAFT REGISTRY
CAMERA NO. 2 DATE: 6-6-89

NOTICE

Weight and balance or operating limitation changes shall be entered in the appropriate aircraft record. An alteration must be compatible with all previous alterations to assure continued conformity with the applicable airworthiness requirements.

8. DESCRIPTION OF WORK ACCOMPLISHED *(If more space is required, attach additional sheets. Identify with aircraft nationality and registration mark and date work completed.)*

INSTALLED RAM AIRCRAFT CORPORATION ENGINE COOLING BAFFLE MATERIAL KIT IN ACCORDANCE WITH STC A7CE AND FAA APPROVED DRAWING PACKAGE #1035, ON BOTH ENGINES. - - END- - -

MINNEAPOLIS GADO-14
NOV 22 1988

☐ ADDITIONAL SHEETS ARE ATTACHED

☆ U.S. GOVERNMENT PRINTING OFFICE: 1986-659-121/40146

FAA AIRCRAFT REGISTRY
CAMERA NO. 2 DATE: 6-6-89

DEPARTMENT OF TRANSPORTATION
FEDERAL AVIATION ADMINISTRATION

MAJOR REPAIR AND ALTERATION
(Airframe, Powerplant, Propeller, or Appliance)

Form Approved
Budget Bureau No. 04-R060.1

FOR FAA USE ONLY
OFFICE IDENTIFICATION

INSTRUCTIONS: Print or type all entries. See FAR 43.9, FAR 43 Appendix B, and AC 43.9-1 (or subsequent revision thereof) for instructions and disposition of this form.

1. AIRCRAFT	MAKE: Cessna	MODEL: 421C
	SERIAL NO.: 421C-1241	NATIONALITY AND REGISTRATION MARK: N27265
2. OWNER	NAME (As shown on registration certificate): SUNPINE PROPERTIES- BOZICH	ADDRESS (As shown on registration certificate): 3563 Ely Lake Drive, Eveleth, Minnesota 55734

3. FOR FAA USE ONLY

The data identified herein complies with the applicable airworthiness requirements of appropriate subtitles of TSO C-20 and is approved for duplication on identical aircraft heaters of the B-1500 thru the B-4050 series, when alteration is accomplished by the original modifier.

AGL-GADO-18 Principal Maintenance Inspector Robert E Kendig

4. UNIT IDENTIFICATION / 5. TYPE

UNIT	MAKE	MODEL	SERIAL NO.	5. TYPE: REPAIR	5. TYPE: ALTERATION
AIRFRAME	(As described in item 1 above)				
POWERPLANT					
PROPELLER					
APPLIANCE	TYPE: 1026/13E55-1; MANUFACTURER: JANITROL	B4050	102688-3		X

6. CONFORMITY STATEMENT

A. AGENCY'S NAME AND ADDRESS	B. KIND OF AGENCY	C. CERTIFICATE NO.
C & D Airmotive 302 Post Road Buchanan, Michigan 49107	U.S. CERTIFICATED MECHANIC FOREIGN CERTIFICATED MECHANIC X CERTIFICATED REPAIR STATION MANUFACTURER	C-18-24

D. I certify that the repair and/or alteration made to the unit(s) identified in item 4 above and described on the reverse or attachments hereto have been made in accordance with the requirements of Part 43 of the U.S. Federal Aviation Regulations and that the information furnished herein is true and correct to the best of my knowledge.

DATE: 10/26/88

SIGNATURE OF AUTHORIZED INDIVIDUAL: Dennis F Gladych

7. APPROVAL FOR RETURN TO SERVICE

Pursuant to the authority given persons specified below, the unit identified in item 4 was inspected in the manner prescribed by the Administrator of the Federal Aviation Administration and is XX APPROVED ☐ REJECTED

BY					
	FAA FLT. STANDARDS INSPECTOR	MANUFACTURER	X	INSPECTION AUTHORIZATION	OTHER (Specify)
	FAA DESIGNEE	REPAIR STATION		CANADIAN DEPARTMENT OF TRANSPORT INSPECTOR OF AIRCRAFT	

DATE OF APPROVAL OR REJECTION	CERTIFICATE OR DESIGNATION NO.	SIGNATURE OF AUTHORIZED INDIVIDUAL
Nov. 16, 1988	AP470580641IA	Rodney Johnson

(8320)

FAA Form 337 (7-67)

FAA AIRCRAFT REGISTRY
CAMERA NO. 2 DATE: 6-6-89

NOTICE

Weight and balance or operating limitation changes shall be entered in the appropriate aircraft record. An alteration must be compatible with all previous alterations to assure continued conformity with the applicable airworthiness requirements.

8. DESCRIPTION OF WORK ACCOMPLISHED *(If more space is required, attach additional sheets. Identify with aircraft nationality and registration mark and date work completed.)*

1. The combustion heater tube assembly installed in the heater identified in Block #4, has been approved for installation based on data and tests listed below in accordance with applicable subtitles of the Society of Automotive Engineers, Inc., Aeronautical Standards AS-143B, which is the basic standards for TSO C-20.

2. In accordance with Subtitle 4.5 of AS-143B, this combustion tube assembly will be marked with the C & D Airmotive logo near the combustion air pressure switch attachment point, via electro chemical process. This marking can readily be seen with the heater shroud installed, and by visual inspection after installation in the aircraft.

3. The unit is constructed of stainless steel type 309.029, which is equivalent to AMS 5540, required by subtitle 5.4.1 of AS-143B.

4. Equivalent unit was operated in excess of 500 hours per subtitle 5.4.3 and 5.44 of AS-143B, with no deterioration as determined by subsequent analysis.

5. Tests were conducted which exceeded subtitle 6.1.6 and 6.1.6.1 of AS-143B with no deterioration incurred.

6. Upon completion of the previously listed subtitles, a pressure decay test required under paragraph "e" of AD 82-07-03 was conducted, and the results exceeded these requirements.

NOTE: The installation of the combustion tube <u>does not</u> relieve any responsibility for compliance with AD 82-07-03.

END

☐ ADDITIONAL SHEETS ARE ATTACHED

☆U.S. GOVERNMENT PRINTING OFFICE: 1977 - 771-021/290

FAA AIRCRAFT REGISTRY
CAMERA NO. 2N DATE: 8-11-88

U.S. DEPARTMENT OF TRANSPORTATION
FEDERAL AVIATION ADMINISTRATION

MAJOR REPAIR AND ALTERATION
(Airframe, Powerplant, Propeller, or Appliance)

Form Approved
Budget Bureau No. 04-R060.1

FOR FAA USE ONLY
OFFICE IDENTIFICATION
AGL-GADO-14

INSTRUCTIONS: Print or type all entries. See FAR 43.9, FAR 43 Appendix B, and AC 43.9-1 (or subsequent revision thereof) for instructions and disposition of this form.

1. AIRCRAFT	MAKE: CESSNA	MODEL: 421C
	SERIAL NO.: 421C-1241	NATIONALITY AND REGISTRATION MARK: U.S.A. N2726S
2. OWNER	NAME (*As shown on registration certificate*): SUNPINE PROPERTIES-BOZICH	ADDRESS (*As shown on registration certificate*): 3563 Ely Lake Drive, Eveleth, Minnesota 55734

3. FOR FAA USE ONLY

4. UNIT IDENTIFICATION / **5. TYPE**

UNIT	MAKE	MODEL	SERIAL NO.	REPAIR	ALTERATION
AIRFRAME	(As described in item 1 above)				X
POWERPLANT					
PROPELLER					
APPLIANCE	TYPE / MANUFACTURER				

6. CONFORMITY STATEMENT

A. AGENCY'S NAME AND ADDRESS	B. KIND OF AGENCY	C. CERTIFICATE NO.
Richard A. Hansen RR #3 Baudette, Minnesota 56623	X U.S. CERTIFICATED MECHANIC FOREIGN CERTIFICATED MECHANIC CERTIFICATED REPAIR STATION MANUFACTURER	AP469369940

D. I certify that the repair and/or alteration made to the unit(s) identified in item 4 above and described on the reverse or attachments hereto have been made in accordance with the requirements of Part 43 of the U.S. Federal Aviation Regulations and that the information furnished herein is true and correct to the best of my knowledge.

DATE	SIGNATURE OF AUTHORIZED INDIVIDUAL
11-6-87	Richard A. Hansen *Richard Hansen*

7. APPROVAL FOR RETURN TO SERVICE

Pursuant to the authority given persons specified below, the unit identified in item 4 was inspected in the manner prescribed by the Administrator of the Federal Aviation Administration and is [X] APPROVED [ ] REJECTED

BY						
	FAA FLT. STANDARDS INSPECTOR		MANUFACTURER	X	INSPECTION AUTHORIZATION	OTHER (*Specify*)
	FAA DESIGNEE		REPAIR STATION		CANADIAN DEPARTMENT OF TRANSPORT INSPECTOR OF AIRCRAFT	

DATE OF APPROVAL OR REJECTION	CERTIFICATE OR DESIGNATION NO.	SIGNATURE OF AUTHORIZED INDIVIDUAL
11-13-87	AP476602849IA	Francis J. Einarson *Francis J. Einarson*

FAA Form 337 (7-67) (8320)

FAA AIRCRAFT REGISTRY
CAMERA NO. 2N DATE: 8-11-88

NOTICE

Weight and balance or operating limitation changes shall be entered in the appropriate aircraft record. An alteration must be compatible with all previous alterations to assure continued conformity with the applicable airworthiness requirements.

8. DESCRIPTION OF WORK ACCOMPLISHED *(If more space is required, attach additional sheets. Identify with aircraft nationality and registration mark and date work completed.)*

REMOVED EXISTING ENGINE AIR FILTER ASSEMBLIES CESSNA PART #9910018-1 AND INSTALLED BRACKETT AIR FILTER ASSEMBLIES PART #BA-108. WORK ACCOMPLISHED IN ACCORDANCE WITH STC SA71GL AND FAA APPROVED DRAWING SHEET #BA-108E.

END

☐ ADDITIONAL SHEETS ARE ATTACHED

☆ U.S. GOVERNMENT PRINTING OFFICE: 1985-659-121/40146

FAA AIRCRAFT REGISTRY
CAMERA NO. 2N DATE: 8-11-88

U.S. DEPARTMENT OF TRANSPORTATION
FEDERAL AVIATION ADMINISTRATION

MAJOR REPAIR AND ALTERATION
(Airframe, Powerplant, Propeller, or Appliance)

Form Approved
Budget Bureau No. 04-R060.1

FOR FAA USE ONLY

OFFICE IDENTIFICATION
AGE-GADO-14

INSTRUCTIONS: Print or type all entries. See FAR 43.9, FAR 43 Appendix B, and AC 43.9-1 (or subsequent revision thereof) for instructions and disposition of this form.

1. AIRCRAFT	MAKE: CESSNA	MODEL: 421C
	SERIAL NO.: 421C-1241	NATIONALITY AND REGISTRATION MARK: U.S.A. N2726S
2. OWNER	NAME (*As shown on registration certificate*): SUNPINE PROPERTIES-BOZICH	ADDRESS (*As shown on registration certificate*): 3563 Ely Lake Drive, Eveleth, Minnesota 55734

3. FOR FAA USE ONLY

4. UNIT IDENTIFICATION

UNIT	MAKE	MODEL	SERIAL NO.	5. TYPE: REPAIR	5. TYPE: ALTERATION
AIRFRAME	(*As described in item 1 above*)				X
POWERPLANT					
PROPELLER					
APPLIANCE	TYPE / MANUFACTURER				

6. CONFORMITY STATEMENT

A. AGENCY'S NAME AND ADDRESS	B. KIND OF AGENCY	C. CERTIFICATE NO.
Richard A. Hansen RR #3 Baudette, Minnesota 56623	X U.S. CERTIFICATED MECHANIC FOREIGN CERTIFICATED MECHANIC CERTIFICATED REPAIR STATION MANUFACTURER	AP469369940

D. I certify that the repair and/or alteration made to the unit(s) identified in item 4 above and described on the reverse or attachments hereto have been made in accordance with the requirements of Part 43 of the U.S. Federal Aviation Regulations and that the information furnished herein is true and correct to the best of my knowledge.

DATE	SIGNATURE OF AUTHORIZED INDIVIDUAL
11-6-87	Richard A. Hansen *Richard Hansen*

7. APPROVAL FOR RETURN TO SERVICE

Pursuant to the authority given persons specified below, the unit identified in item 4 was inspected in the manner prescribed by the Administrator of the Federal Aviation Administration and is [X] APPROVED [ ] REJECTED

BY							
		FAA FLT. STANDARDS INSPECTOR		MANUFACTURER	X	INSPECTION AUTHORIZATION	OTHER (*Specify*)
		FAA DESIGNEE		REPAIR STATION		CANADIAN DEPARTMENT OF TRANSPORT INSPECTOR OF AIRCRAFT	

DATE OF APPROVAL OR REJECTION	CERTIFICATE OR DESIGNATION NO.	SIGNATURE OF AUTHORIZED INDIVIDUAL
11-13-87	AP476602849IA	Francis J. Einarson *Francis J. Einarson*

FAA Form 337 (7-67) (8320)

FAA AIRCRAFT REGISTRY
CAMERA NO. 2N DATE: 8-11-88

NOTICE

Weight and balance or operating limitation changes shall be entered in the appropriate aircraft record. An alteration must be compatible with all previous alterations to assure continued conformity with the applicable airworthiness requirements.

8. DESCRIPTION OF WORK ACCOMPLISHED *(If more space is required, attach additional sheets. Identify with aircraft nationality and registration mark and date work completed.)*

INSTALLED RAM AIRCRAFT CORPORATION SLIP JOINT EXHAUST SYSTEM IN ACCORDANCE WITH STC A7CE AND FAA APPROVED DRAWING PACKAGE #1153.

END

☐ ADDITIONAL SHEETS ARE ATTACHED

☆ U.S. GOVERNMENT PRINTING OFFICE: 1986-659-121/40146

FAA AIRCRAFT REGISTRY
CAMERA NO. 2N DATE: 8-11-88

APR 2 1 1987

DEPARTMENT OF TRANSPORTATION
FEDERAL AVIATION ADMINISTRATION

MAJOR REPAIR AND ALTERATION
(Airframe, Powerplant, Propeller, or Appliance)

Form Approved
Budget Bureau No. 04-R060.1

FOR FAA USE ONLY
OFFICE IDENTIFICATION ACL-GADO-2

INSTRUCTIONS: Print or type all entries. See FAR 43.9, FAR 43 Appendix B, and AC 43.9-1 (or subsequent revision thereof) for instructions and disposition of this form.

1. AIRCRAFT	MAKE: Cessna	MODEL: 421C
	SERIAL NO.: 421C1241	NATIONALITY AND REGISTRATION MARK: N2726S
2. OWNER	NAME (As shown on registration certificate): Sunpine Properties	ADDRESS (As shown on registration certificate): 3563 Ely Lake Dr. Eveleth, MN 55734

3. FOR FAA USE ONLY

4. UNIT IDENTIFICATION / 5. TYPE

UNIT	MAKE	MODEL	SERIAL NO.	5. TYPE: REPAIR	5. TYPE: ALTERATION
AIRFRAME	(As described in item 1 above)				XX
POWERPLANT					
PROPELLER					
APPLIANCE	TYPE / MANUFACTURER				

6. CONFORMITY STATEMENT

A. AGENCY'S NAME AND ADDRESS	B. KIND OF AGENCY	C. CERTIFICATE NO.
Elliott Flying Service, Inc. P.O. Box 100 Moline, IL 61265	U.S. CERTIFICATED MECHANIC FOREIGN CERTIFICATED MECHANIC X CERTIFICATED REPAIR STATION MANUFACTURER	3786

D. I certify that the repair and/or alteration made to the unit(s) identified in item 4 above and described on the reverse or attachments hereto have been made in accordance with the requirements of Part 43 of the U.S. Federal Aviation Regulations and that the information furnished herein is true and correct to the best of my knowledge.

DATE	SIGNATURE OF AUTHORIZED INDIVIDUAL
April 17, 1987	Chris Behn - Chris Behn

7. APPROVAL FOR RETURN TO SERVICE

Pursuant to the authority given persons specified below, the unit identified in item 4 was inspected in the manner prescribed by the Administrator of the Federal Aviation Administration and is ☒ APPROVED ☐ REJECTED

BY						
	FAA FLT. STANDARDS INSPECTOR		MANUFACTURER		INSPECTION AUTHORIZATION	OTHER (Specify)
	FAA DESIGNEE	X	REPAIR STATION		CANADIAN DEPARTMENT OF TRANSPORT INSPECTOR OF AIRCRAFT	

DATE OF APPROVAL OR REJECTION	CERTIFICATE OR DESIGNATION NO.	SIGNATURE OF AUTHORIZED INDIVIDUAL
April 17, 1987	3786	Dan Frahm - Dan Frahm

FAA Form 337 (7-67) (8320)

FAA AIRCRAFT REGISTRY
CAMERA NO. 2N DATE: 8-11-88

NOTICE

Weight and balance or operating limitation changes shall be entered in the appropriate aircraft record. An alteration must be compatible with all previous alterations to assure continued conformity with the applicable airworthiness requirements.

8. DESCRIPTION OF WORK ACCOMPLISHED *(If more space is required, attach additional sheets. Identify with aircraft nationality and registration mark and date work completed.)*

1. Installed Wulfsberg Flitefone VI per Flitefone VI installation manual, P/N 150-0119-000, consisting of the following: RT18D RT Unit, WH-10 Handset and AT461 Antenna.

2. All work was done in accordance with AC 43.13-1A and AC 43.13-2A.

3. Weight, Balance & equipment list were revised to reflect this installation.

☐ ADDITIONAL SHEETS ARE ATTACHED

☆ U.S. GPO: 1981 - 775-332/47

FAA AIRCRAFT REGISTRY
CAMERA NO. 2N DATE: 8-11-88

U.S. DEPARTMENT OF TRANSPORTATION
FEDERAL AVIATION ADMINISTRATION

MAJOR REPAIR AND ALTERATION
(Airframe, Powerplant, Propeller, or Appliance)

Form Approved
Budget Bureau No. 04-R060.1

FOR FAA USE ONLY
OFFICE IDENTIFICATION ACE-FSDO 64

INSTRUCTIONS: Print or type all entries. See FAR 43.9, FAR 43 Appendix B, and AC 43.9-1 (or subsequent revision thereof) for instructions and disposition of this form.

1. AIRCRAFT	MAKE: Cessna	MODEL: 421C
	SERIAL NO.: 1241	NATIONALITY AND REGISTRATION MARK: N2726S
2. OWNER	NAME (As shown on registration certificate): Sunpine Properties-Bozich	ADDRESS (As shown on registration certificate): 3563 Ely Lake Dr. Eveleth, MN 55734

3. FOR FAA USE ONLY

4. UNIT IDENTIFICATION / 5. TYPE

UNIT	MAKE	MODEL	SERIAL NO.	REPAIR	ALTERATION
AIRFRAME	********** (As described in item 1 above) **********				X
POWERPLANT					
PROPELLER					
APPLIANCE	TYPE / MANUFACTURER				

6. CONFORMITY STATEMENT

A. AGENCY'S NAME AND ADDRESS	B. KIND OF AGENCY	C. CERTIFICATE NO.
Yingling Aircraft, Inc. 2010 Airport Rd. Wichita, KS 67205	U.S. CERTIFICATED MECHANIC FOREIGN CERTIFICATED MECHANIC X CERTIFICATED REPAIR STATION MANUFACTURER	CRS 3923

D. I certify that the repair and/or alteration made to the unit(s) identified in item 4 above and described on the reverse or attachments hereto have been made in accordance with the requirements of Part 43 of the U.S. Federal Aviation Regulations and that the information furnished herein is true and correct to the best of my knowledge.

DATE: 6-9-86

SIGNATURE OF AUTHORIZED INDIVIDUAL: Tomas C. Fast

7. APPROVAL FOR RETURN TO SERVICE

Pursuant to the authority given persons specified below, the unit identified in item 4 was inspected in the manner prescribed by the Administrator of the Federal Aviation Administration and is [X] APPROVED [ ] REJECTED.

BY						
	FAA FLT. STANDARDS INSPECTOR		MANUFACTURER		INSPECTION AUTHORIZATION	OTHER (Specify)
	FAA DESIGNEE	X	REPAIR STATION		CANADIAN DEPARTMENT OF TRANSPORT INSPECTOR OF AIRCRAFT	

DATE OF APPROVAL OR REJECTION	CERTIFICATE OR DESIGNATION NO.	SIGNATURE OF AUTHORIZED INDIVIDUAL
6-9-86	CRS 3923	Tomas C. Fast

FAA Form 337 (7-67)

(8320)

FAA AIRCRAFT REGISTRY
CAMERA NO. 2N DATE: 8-11-88

NOTICE

Weight and balance or operating limitation changes shall be entered in the appropriate aircraft record. An alteration must be compatible with all previous alterations to assure continued conformity with the applicable airworthiness requirements.

8. DESCRIPTION OF WORK ACCOMPLISHED *(If more space is required, attach additional sheets. Identify with aircraft nationality and registration mark and date work completed.)*

Installed an ARNAV R-21 Loran C System. Mounted the receiver in the avionics panel at station 113.0. Mounted the antenna and preamp under the floor boards at station 244.0.

Coupled Loran navigation information to the HSI as a shared CDI with Nav 1 and to autopilot through appropriate switching per AC20-121, PP 3 (3). Mounted a green annunciator light on aircraft panel per AC20-121, PP 3 (4). Placarded aircraft panel "Loran C not approved for IFR", per AC20-121, PP 3 (6).

This installation accomplished utilizing provisions provided by the aircraft manufacturer and the equipment manufacturer and complies with AC20-121, AC43.13-1A, Chapter 11, Section 2, PPs 428, 429, and 430, Section 3, Section 7, Section 13, and with AC43.13-2A, Chapter 2, PPs 22, 23, Chapter 3, PP 44.

Installed RT859A ARC transponder system. Mounted transceiver in the avionics panel at station 94, and the KA60 Antenna under the floor boards at station 156.

Installed transponder select switch through appropriate wiring in the avionics panel. Checked transponder operation for compliance with FAR 91.172 and FAR 43, Appendix F.

Computed weight and balance supplement. Entered alteration in aircraft log.

..... end .....

☐ ADDITIONAL SHEETS ARE ATTACHED

U.S. GPO 1981 775-332/47

TOTAL FLOOD CORPORATION
1409 Plaza Center
Blue Springs, Missouri 64105
Telephone: 816-524-6300

FAA APPROVED

AIRPLANE FLIGHT MANUAL SUPPLEMENT

Model 421C
Reg. No. N2726S ONLY
Ser. No. 421C1241 ONLY

This Supplement must be attached to the required Pilot's Operating Handbook and FAA Approved Airplane Flight Manual for this airplane, when Total Flood Corporation engine and cabin fire extinguisher system is installed in accordance with FAA Form 337, dated APR 27 1984.

The information herein supplements the basic manual only in those areas listed herein. For Limitations, Procedures not contained in this supplement, consult the basic manual.

FAA APPROVED: J M Baker
for Manager, Wichita Aircraft Certification Office, Federal Aviation Administration, Central Region, Wichita, Kansas

Date: MAY 1 1984

FAA AIRCRAFT REGISTRY
CAMERA NO. 2N DATE: 8-11-88

FAA AIRCRAFT REGISTRY
CAMERA NO. 2N DATE: 8-11-88

DEPARTMENT OF TRANSPORTATION
FEDERAL AVIATION ADMINISTRATION

MAJOR REPAIR AND ALTERATION
(Airframe, Powerplant, Propeller, or Appliance)

Form Approved
Budget Bureau No. 04-R060.1

FOR FAA USE ONLY

OFFICE IDENTIFICATION
ACE-FSDO-64
~~Wichita, Kansas~~

INSTRUCTIONS: Print or type all entries. See FAR 43.9, FAR 43 Appendix B, and AC 43.9-1 (or subsequent revision thereof) for instructions and disposition of this form.

1. AIRCRAFT	MAKE: Cessna	MODEL: 421C
	SERIAL NO.: 421C1241	NATIONALITY AND REGISTRATION MARK: N2726S
2. OWNER	NAME (As shown on registration certificate): P.U.M.N. Inc.	ADDRESS (As shown on registration certificate): 5410 Rittiman Plaza, San Antonio, TX 72818

3. FOR FAA USE ONLY

The ~~Repair~~/Alteration identified herein complies with applicable airworthiness requirements and is approved only for the above described aircraft subject to conformity inspection by a person authorized in FAR 43.7.

05-01-84 (Date) — Glenn L. Martin ACE-FSDO64 (Approving Inspector)

4. UNIT IDENTIFICATION / 5. TYPE

UNIT	MAKE	MODEL	SERIAL NO.	5. TYPE: REPAIR	5. TYPE: ALTERATION
AIRFRAME	********** (As described in item 1 above) **********				XX
POWERPLANT					
PROPELLER					
APPLIANCE	TYPE				
	MANUFACTURER				

6. CONFORMITY STATEMENT

A. AGENCY'S NAME AND ADDRESS	B. KIND OF AGENCY	C. CERTIFICATE NO.
Yingling Aircraft, Inc. PO Box 9248 Wichita, KS 67277	U.S. CERTIFICATED MECHANIC FOREIGN CERTIFICATED MECHANIC X CERTIFICATED REPAIR STATION MANUFACTURER	3923

D. I certify that the repair and/or alteration made to the unit(s) identified in item 4 above and described on the reverse or attachments hereto have been made in accordance with the requirements of Part 43 of the U.S. Federal Aviation Regulations and that the information furnished herein is true and correct to the best of my knowledge.

DATE: 4-27-84

SIGNATURE OF AUTHORIZED INDIVIDUAL: Duane R Dyer

7. APPROVAL FOR RETURN TO SERVICE

Pursuant to the authority given persons specified below, the unit identified in item 4 was inspected in the manner prescribed by the Administrator of the Federal Aviation Administration and is ☒ APPROVED ☐ REJECTED

BY						OTHER (Specify)
	FAA FLT. STANDARD INSPECTOR		MANUFACTURER		INSPECTION AUTHORIZATION	APR 30 1984
	FAA DESIGNEE	X	REPAIR STATION		CANADIAN DEPARTMENT OF TRANSPORT INSPECTOR OF AIRCRAFT	ICT FSDO 64 Wichita, Kansas

DATE OF APPROVAL OR REJECTION	CERTIFICATE OR DESIGNATION NO.	SIGNATURE OF AUTHORIZED INDIVIDUAL
4-27-84	3923	Duane R Dyer

FAA Form 337 (7-67)

(8320)

FAA AIRCRAFT REGISTRY
CAMERA NO. 2N DATE: 8-11-88

NOTICE

Weight and balance or operating limitation changes shall be entered in the appropriate aircraft record. An alteration must be compatible with all previous alterations to assure continued conformity with the applicable airworthiness requirements.

8. DESCRIPTION OF WORK ACCOMPLISHED *(If more space is required, attach additional sheets. Identify with aircraft nationality and registration mark and date work completed.)*

A Low Thrust Detector System has been installed in accordance with Advanced Aero Safety drawing list number 101, and approved by FAA supplemental type certificate SA1007NW. Note: thrust detector sensor located under pilots seat pedestal at fuselage station 141.00.
Installed a Total Flood Corporation cabin and 2-engine fire protection system per FAA STC SA1814CE and Total Flood installation instructions supplied with the fire protection system.
Previously approved modifications to the aircraft required minor changes to installation defined by the Total Flood installation instructions. These minor changes were made in accordance with the previously FAA approved data contained in the Total Flood Corporation "Installation and Maintenance Manual, TFA18-0024."
Container and valve mounting direction reversed to clear radar altimeter per para. 2.0.0 thru 2.3.0. Added a 2nd solenoid valve to protect cabin per section 1, and section 2's para. 2.2.1. All tube and hose routing per 2.3.0. Nozzles and their locations per STC approved data and para. 2.8.0 thru 2.8.2.
Aircraft weight and balance have been revised.

.....end.....

This installation has been inspected. I recommend approval of Flight Manual Supplement, as submitted May 1, 1984.

Ellwood L. Martin
CEFSDO-64

☐ ADDITIONAL SHEETS ARE ATTACHED

★1975-G.P.O.-1703-M/673-200/175

Memorandum

U.S. Department of Transportation
Federal Aviation Administration

Subject: ACTION: Field Approval

Date: April 26, 1984

Reply to Attn. of: ACE-FSDO-64

From: Glenn L. Martin
General Aviation Safety Inspector,
Airworthiness

To: Manager, Wichita Aircraft Certification Office

We have been approached to field approve a change to the Total Flood Corporation fire extinguisher system installed on Cessna 421 N2726S by Yingling Aircraft in Wichita.

We would accept the change, provided we have the concurrence of your office.

Please review the information and provide us with your comments.

I CONCUR WITH THIS FIELD APPROVAL

Bob Koppard
ACE 130W
5/2/84

I CONCUR WITH THE FIELD APPROVAL.

Floyd L. Edwards
ACE-140W
5/2/84

FAA AIRCRAFT REGISTRY
CAMERA NO. 2N DATE: 8-11-88

FAA AIRCRAFT REGISTRY
CAMERA NO. 2N DATE: 8-11-88

Form Approved
Budget Bureau No. 04-R0058

DEPARTMENT OF TRANSPORTATION
FEDERAL AVIATION ADMINISTRATION

APPLICATION FOR AIRWORTHINESS CERTIFICATE

INSTRUCTIONS—Print or type. Do not write in shaded areas; these are for FAA use only. Submit original only to an authorized FAA Representative. If additional space is required, use an attachment. For special flight permits complete Sections II and VI or VII as applicable.

I. AIRCRAFT DESCRIPTION

1. REGISTRATION MARK: N2726S	2. AIRCRAFT BUILDER'S NAME (make): Cessna	3. AIRCRAFT MODEL DESIGNATION: 421C	4. YR. MFG.: 1982
5. AIRCRAFT SERIAL NO.: 421C1241	6. ENGINE BUILDER'S NAME (make): Continental	7. ENGINE MODEL DESIGNATION: GTSIO-520-N	
8. NUMBER OF ENGINES: TWO	9. PROPELLER BUILDER'S NAME (make): McCauley	10. PROPELLER MODEL DESIGNATION: 3FF32C501/90UMB	

FAA CODING: 2 N 2 6 S 1 6 / 1 7 1 3 9

11. AIRCRAFT IS: XXXXXXXX USED XXXX IMPORT

II. CERTIFICATION REQUESTED

APPLICATION IS HEREBY MADE FOR: (Check applicable items)

A [1] [X] STANDARD AIRWORTHINESS CERT. (Indicate category) [X] NORMAL [ ] UTILITY [ ] ACROBATIC [ ] TRANSPORT [ ] GLIDER [ ] BALLOON

B [ ] SPECIAL AIRWORTHINESS CERTIFICATE (Check appropriate items)

- [2] LIMITED
- [5] PROVISIONAL (Indicate class)
  - [1] CLASS I
  - [2] CLASS II
- [3] RESTRICTED (Indicate operation(s) to be conducted)
  - [1] AGRICULTURE & PEST CONTROL
  - [2] AERIAL SURVEYING
  - [3] AERIAL ADVERTISING
  - [4] FOREST (Wild life conservation)
  - [5] PATROLLING
  - [6] WEATHER CONTROL
  - [0] OTHER (Specify)
- [4] EXPERIMENTAL (Indicate operation(s) to be conducted)
  - [1] RESEARCH AND DEVELOPMENT
  - [2] AMATEUR BUILT
  - [3] EXHIBITION
  - [4] RACING
  - [5] CREW TRAINING
  - [6] MKT. SURVEY
  - [0] TO SHOW COMPLIANCE WITH FAR
- [8] SPECIAL FLIGHT PERMIT (Indicate operation to be conducted then complete Section VI or VII as applicable on reverse side)
  - [1] FERRY FLIGHT FOR REPAIRS, ALTERATIONS, MAINTENANCE OR STORAGE
  - [2] EVACUATE FROM AREA OF IMPENDING DANGER
  - [3] OPERATION IN EXCESS OF MAX. CERTIFICATED TAKE-OFF WEIGHT
  - [4] DELIVERING OR EXPORT
  - [5] PRODUCTION FLIGHT TESTING

C [6] MULTIPLE AIRWORTHINESS CERTIFICATE (Check appropriate Restricted Operation and Standard or Limited as applicable above)

III. OWNER'S CERTIFICATION

A. REGISTERED OWNER (As shown on Certificate of Aircraft Registration)

NAME: Cessna Aircraft Company

ADDRESS: West K-42 Highway, P.O. Box 7704, Wichita, Kansas 67277

IF DEALER, CHECK HERE →

B. AIRCRAFT CERTIFICATION BASIS (Check applicable blocks and complete items as indicated)

[X] AIRCRAFT SPECIFICATION OR TYPE CERTIFICATION DATA SHEET (Give No. and Revision No.): A7CE Rev. 27

AIRWORTHINESS DIRECTIVES (Check if all applicable AD's complied with and give latest AD No.): Issue: N/A

AIRCRAFT LISTING (Give page No(s).): N/A

SUPPLEMENTAL TYPE CERTIFICATE (List number of each STC incorporated): N/A

C. AIRCRAFT OPERATION AND MAINTENANCE RECORDS

[X] CHECK IF RECORDS IN COMPLIANCE WITH FAR 91.173

TOTAL AIRFRAME HOURS: 5.0

[3] EXPERIMENTAL ONLY—Enter hours flown since last certificate issued or renewed: N/A

D. CERTIFICATION—I hereby certify that I am the owner (or his agent) of the aircraft described above; that the aircraft is registered with the Federal Aviation Administration in accordance with Section 501 of the Federal Aviation Act of 1958, and applicable Federal Aviation Regulations; and that the aircraft has been inspected and is airworthy and eligible for the airworthiness certificate requested.

DATE OF APPLICATION	NAME AND TITLE (Print or type)	SIGNATURE
3-9-82	M. Gann, Quality Control Manager	M. Gann

IV. INSPECTION AGENCY VERIFICATION

A. THE AIRCRAFT DESCRIBED ABOVE HAS BEEN INSPECTED AND FOUND AIRWORTHY BY: (Complete this section only if FAR 21.183 (d) applies)

- [2] FAR PART 121 OR 127 CERTIFICATE HOLDER (Give Certificate No.)
- [3] CERTIFICATED MECHANIC (Give Certificate No.)
- [6] CERTIFICATED REPAIR STATION (Give Certificate No.)
- [5] AIRCRAFT MANUFACTURER (Give Name of Firm)

DATE	TITLE	SIGNATURE

V. FAA REPRESENTATIVE CERTIFICATION

(Check ALL applicable blocks) I find that the aircraft described in Section I or VII meets the requirements for: [X] The certification requested, or [4] [ ] Amendment or modification of its current airworthiness certificate. Inspection for a special flight permit under Section VII was conducted by: [ ] FAA Inspector; certificate holder under [ ] FAR 65, [ ] FAR 121 or 127, or [ ] FAR 145.

DATE	DISTRICT OFFICE	DELEGATION OPTION NO.	FAA INSPECTOR'S SIGNATURE
3-9-82	CE EMDO 3-0-43	4 DELEGATION OPTION NO. Engineer Cessna Aircraft Co., Wallace Div Delegation Option Manufacturer, CE-3 By Carl J. Corker	1

FAA Form 8130-6 (7-70)

FAA AIRCRAFT REGISTRY
CAMERA NO. 2N DATE: 8-11-88

VI. PRODUCTION FLIGHT TESTING

A. MANUFACTURER

NAME	ADDRESS

B. PRODUCTION BASIS *(Check applicable item)*

- [ ] PRODUCTION CERTIFICATE *(Give production certificate number)*
- [ ] TYPE CERTIFICATE ONLY
- [ ] APPROVED PRODUCTION INSPECTION SYSTEM

C. GIVE QUANTITY OF CERTIFICATES REQUIRED FOR OPERATING NEEDS:

DATE OF APPLICATION	NAME AND TITLE *(Print or type)*	SIGNATURE

VII. SPECIAL FLIGHT PERMIT PURPOSES OTHER THAN PRODUCTION FLIGHT TEST

A. DESCRIPTION OF AIRCRAFT

REGISTERED OWNER	ADDRESS
BUILDER *(Make)*	MODEL
SERIAL NUMBER	REGISTRATION MARK

B. DESCRIPTION OF FLIGHT

FROM	TO	
VIA	DEPARTURE DATE	DURATION

C. CREW REQUIRED TO OPERATE THE AIRCRAFT AND ITS EQUIPMENT

- [ ] PILOT
- [ ] CO-PILOT
- [ ] NAVIGATOR
- [ ] OTHER *(Specify)*

D. THE AIRCRAFT DOES NOT MEET THE APPLICABLE AIRWORTHINESS REQUIREMENTS AS FOLLOWS:

E. THE FOLLOWING RESTRICTIONS ARE CONSIDERED NECESSARY FOR SAFE OPERATION *(Use attachment if necessary)*

F. **CERTIFICATION**—I hereby certify that I am the registered owner (or his agent) of the aircraft described above; that the aircraft is registered with the Federal Aviation Administration in accordance with Section 501 of the Federal Aviation Act of 1958, and applicable Federal Aviation Regulations; and that the aircraft has been inspected and is airworthy for the flight described.

DATE	NAME AND TITLE *(Print or type)*	SIGNATURE

VIII. AIRWORTHINESS DOCUMENTATION (FAA use only)

- [X] A. Operating Limitations and Markings in Compliance with FAR 91.31 as Applicable
- [ ] B. Current Operating Limitations Attached
- [ ] C. Data, Drawings, Photographs, etc. *(Attach when required)*
- [X] D. Current Weight and Balance Information Available in Aircraft
- [ ] E. Major Repair and Alteration, FAA 337 *(Attach when required)*
- [X] F. This Inspection Recorded in Aircraft Records
- G. Statement of Conformity, FAA Form 317 *(Attach when required)*
- H. Foreign Airworthiness Certification for Import Aircraft *(Attach when required)*
- I. Previous Airworthiness Certificate Issued in Accordance with FAR _____ CAR _____ *(Original attached)*
- J. Current Airworthiness Certificate Issued in Accordance with FAR 21.183a or 21.273 *(Copy attached)*

★1975-G.P.O.-1703-M/673-284/178

FAA AIRCRAFT REGISTRY
CAMERA NO. 2N DATE: 8-11-88

UNITED STATES OF AMERICA
DEPARTMENT OF TRANSPORTATION–FEDERAL AVIATION ADMINISTRATION

STANDARD AIRWORTHINESS CERTIFICATE

1. NATIONALITY AND REGISTRATION MARKS	2. MANUFACTURER AND MODEL	3. AIRCRAFT SERIAL NUMBER	4. CATEGORY
N2726S	Cessna 421C	421C1241	Normal

5. AUTHORITY AND BASIS FOR ISSUANCE
This airworthiness certificate is issued pursuant to the Federal Aviation Act of 1958 and certifies that, as of the date of issuance, the aircraft to which issued has been inspected and found to conform to the type certificate therefor, to be in condition for safe operation, and has been shown to meet the requirements of the applicable comprehensive and detailed airworthiness code as provided by Annex 8 to the Convention on International Civil Aviation, except as noted herein.
Exceptions: None

6. TERMS AND CONDITIONS
Unless sooner surrendered, suspended, revoked, or a termination date is otherwise established by the Administrator, this airworthiness certificate is valid for as long as the maintenance, preventative maintenance, and alterations are performed in accordance with Parts 43, and 91 of the Federal Aviation Regulations, as appropriate, and the aircraft is registered in the United States.

DATE OF ISSUANCE	FAA REPRESENTATIVE	DESIGNATION NUMBER
3-9-82	Cessna Aircraft Co. Wallace Div Delegation Option, Manufacturer, CE-3 By	DOA CE-3

Any alteration, reproduction, or misuse of this certificate may be punishable by a fine not exceeding $1,000, or imprisonment not exceeding 3 years, or both. THIS CERTIFICATE MUST BE DISPLAYED IN THE AIRCRAFT IN ACCORDANCE WITH APPLICABLE FEDERAL AVIATION REGULATIONS.

FAA Form 8100-2 (7-67) FORMERLY FAA FORM 1362

FAA AIRCRAFT REGISTRY
CAMERA NO. 2N DATE: 8-11-88